VALLEY design

PARTNER AT YOUR TABLE

OEM Product Guide

Prices effective January 1, 2019

TABLE OF CONTENTS

Genu-Flip Kit 3
Genu-Fold Accessories 6
Nester Series 10
Wire Management 15
Aluminum Series 28
Column Series 34
Angled Leg Series 40
Tubular Series 43
Arch Series 61
Raptor Series 66
Laser Series 69
Frame Series 76
Disk Series 79
Escalate Series 91
Focus Series 96
ErgoRound Series 112
ErgoSquared Series 118
Numa-Lift Option 135
Modesty Panel 137
Laptop Table 141
Parsons Frame 143
Accessories 148
Available Finishes 160
Terms and Conditions 162
Contact Information 163

PARTNER AT YOUR TABLE

VALLEY design

GF

PARTNER AT YOUR TABLE

Genu-Flip KIT

Tables equipped with Genu-Flip mechanisms nest compactly together, using only 4 3/8" of horizontal space. The tables are also very efficient to use, with the release paddle located on the end making it easy to flip and roll. Surface mount mechanisms ensure an efficient installation too!

EXTREMELY efficient and COMPACT

Find intended use warranty information Online at www.ValleyDesign.biz/Warranty

133 South Highway 52, Fountain, MN 55935 | ValleyDesign.biz | 507.268.4221

Genu-Flip

ITEM INFORMATION

Item#	Description	Recommended Max. Table Size	Price
GFLIP-24	Kit with two flip mechanisms and one shaft for placing bases on 24” center	36” x 36”	$274
GFLIP-30	Kit with two flip mechanisms and one shaft for placing bases on 30” center	36” x 42”	$274
GFLIP-36	Kit with two flip mechanisms and one shaft for placing bases on 36” center	36” x 48”	$274
GFLIP-42	Kit with two flip mechanisms and one shaft for placing bases on 42” center	36” x 54”	$274
GFLIP-48	Kit with two flip mechanisms and one shaft for placing bases on 48” center	36” x 60”	$274
GFLIP-54	Kit with two flip mechanisms and one shaft for placing bases on 54” center	36” x 66”	$274
GFLIP-60	Kit with two flip mechanisms and one shaft for placing bases on 60” center	36” x 72”	$274

NOTE: Table bases are not included in the pricing.

Specification Example for a typical 30" x 60” table:

Qty 1	GFLIP-48	Genu-Flip Kit for a table with legs spaced 48” apart on center
Qty 2	101 2022 PA GF-LC	101 22” painted end bases, Genu-Flip mount, locking casters

ADVANTAGES

- Access latch from either end of the top for a quick flip and roll
- Easy to install with surface mount and simple assembly
- Design allows plenty of room for electrical components
- Compact nesting minimizes storage space to only 4⅜” per table
- Positive lock in both the vertical and horizontal position
- Secure from accidental release during use
- Shipped partially knocked down to reduce freight costs
- Fits any Valley Design End Base Series

Nesting Dimensions
(Top view of nested tables.)

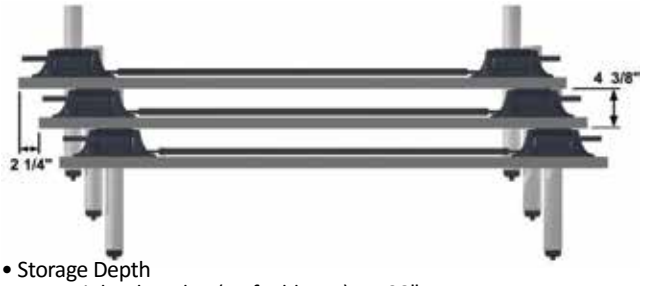

- Storage Depth
  = Mainbar length + (# of tables -1) x 4.38"
- Storage Width
  = Table width + (# of tables -1) x 2.25"
- Maximum Storage Width
  = Table width + 6.75" (table 5 aligns with table 1)

SPECIFICATIONS

Body Material	Injection molded black reinforced nylon
Block Material	Extruded and machined aluminum
Latch Material	Extruded and machined aluminum
Pivot Pin Material	5⁄16” dia. solid steel
Connecting Shaft	¾” dia. steel tube
Screws	#12-8 x 1” PBS, black zinc, #3 Phillips head

Note: Order bases separately with option code -GF (no charge option)

Fixed & Detachable Flip Top Mechanism

ITEM INFORMATION

Item#	Description	Price
00049	Fixed Flip Top Mechanism	$94
00159	Detachable Flip Top Mechanism	$94

ADVANTAGES

- Fixed and detachable flip top mechanisms allow the tables to be flipped into a position parallel to the column
- Detachable flip top mechanism allows top to be easily detached from base assembly
- Allows for ease in storage and moving
- May be purchased as an accessory to our base or separately
- Fits the following single column end and X-Base series: Tubular Series, Laser Series and the Pedestal Disk Series
- **Available in powder coat flat black only**

Fixed Flip top used on
111 X-Base w/ levelers

Fixed Flip Top Mechanism

Detachable Flip Top Mechanism

GF

PARTNER AT YOUR TABLE

VALLEY design

Genu-Fold

Use any of our Genu-Fold Accessories to alleviate your storage problems. Fold table legs under in a locked position with our Genu-Fold folding mechanism and transport and store up to six tables on our mobile table cart.

Storage Made EASY

GENU-FOLD
FOLDING MECHANISM

MOBILE
TABLE CART

SHORT FOLD
MECHANISM

Find intended use warranty information Online at www.ValleyDesign.biz/Warranty

133 South Highway 52, Fountain, MN 55935 | ValleyDesign.biz | 507.268.4221

Genu-Fold
Folding Mechanism

ITEM INFORMATION

Item#	Description	Price
00252	Genu-Fold mechanism with screws	$108 ea

NOTE: Pricing is for mechanism only. Minimum order of one (1) set of 16.

SPECIFICATIONS

- Nylon injection molded body with an extruded aluminum mechanism
- Positive lock in folded and upright positions
- Legs lay parallel with bottom of the work surface when folded on tables as short as 57" long
- Genu-Fold in folded position adds 3 ½" to table thickness
- May be purchased as an accessory to our base or separately. Contact our customer service department for customizing our mechanism to suit your particular needs

Genu-Fold
Short Fold Mechanism

ITEM INFORMATION

Item#	Description	Folded Height	Recommended Min. Table Length	Recommended Max .Table Size	Price
-SF3	Short-Fold mechanism	5½"	38" (36" arch base)	48" round 38" square	$142
-SF3	Double column Short-Fold mechanism	5½"	38" (36" arch base)	48" round 38" square	$297

Shown with a 4012022PASF3.

Short Fold Mechanism Kit Includes:

- Column with ¼" thick steel offset plate
- Genu-Fold mechanism
- Base (ships assembled)

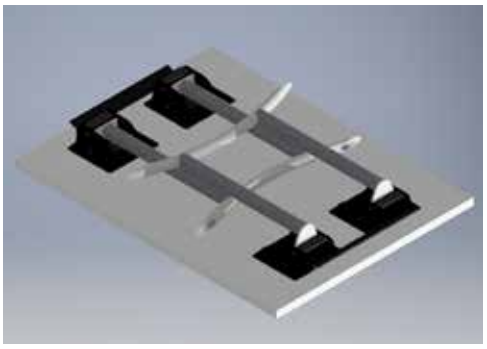

Shown with a 4012032

ADVANTAGES

- For tables less than 57" to as short as 38"
- **Each table will use one Short-Fold leg and one regular Genu-Fold leg. See above for added pricing**
- Less expensive, lighter weight and less visible than riser brackets
- Use with any Valley Design base that is available with Genu-Fold mechanism
- Single or double column versions

SPECIFICATIONS

Base Height	27¾" (without table top)
Assembly Method	Steel offset plate welded to column (steel legs) Steel offset plate bolted to the column (aluminum legs)
Necessary Attachments	Each table will use one Short-Fold let and one regular Genu-Fold leg
Mechanism	Uses same mechanism as Genu-Fold
Mounting Pattern	Same as Genu-Fold (bigger inset)
Shipped	Genu-Fold mechanism and column with ¼" thick steel offset plate Fully assembled

Genu-Fold
Mobile Table Cart

ITEM INFORMATION

Item#	Description	Capacity	Price
Table Cart 60R	60” round tops, 2 cross rails	4-6 round tables	$915
Table Cart 72L4	Max. 72L, 4 cross rails	4-6 rectangular tables	$1,042

Note: Load Capacity: 500 lbs.

SPECIFICATIONS

Main Bars	1½” 11 ga. steel tubing for structural supports 1½” 14 ga. steel tubing for non-load bearing supports and bent frames
Casters	5” dia., ½-13 stems
Leveler	5⁄16”-18 x ½” long threaded stem with black nylon end
Assembly Method	Mechanically fastened and welded
Shipped	All components included for one cart Not assembled

NS

PARTNER AT YOUR TABLE

VALLEY design

Nester Series

When you experience the advantages of a flip-top table in providing easy, compact storage, you will be doing flips of your own. The X-base nester is specifically built with nesting in mind. The base prongs are bent in a way to allow them to roll under the next base, giving you the tightest nesting dimension possible. The dual leg version allows tables to flip for easy push away storage. Super-size the order for larger tables by making it a Double Column version.

the NESTING MECHANISM

X-BASE
SINGLE COLUMN

DUAL LEG
NESTER MECHANISM

DOUBLE COLUMN
NESTER MECHANISM

Find intended use warranty information Online at www.ValleyDesign.biz/Warranty

133 South Highway 52, Fountain, MN 55935 | ValleyDesign.biz | 507.268.4221

Nester Series
Single Column X-Base

ITEM INFORMATION

Item #	Base Spread	Max. Table Size (Round)	Max. Table Size (Square)	Price
317N3018LC	18" x 18"	24"	20" x 20"	$393
317N3022LC	22" x 22"	30"	26" x 26"	$406
317N30226LC	22" x 26"	N/A	26" x 32"	$411
317N3026LC	26" x 26"	34"	30" x 30"	$422

Note: Tops are not included in the Nesting Kit.

Nester Series X-Base Kit™ Includes:

- Genu-Fold Mechanism, Column, X-Base, Casters.

SPECIFICATIONS

Base Height	27¾" (with levelers and without table top)
Column	3” diameter x 14 ga. round steel tube
Main Bar/ Feet:	½” thick steel
Mounting Plate	Genu-Fold3™
Locking Caster	4 – 3” dia. with 5⁄16” - 18” stem
Shipped	All components included for nesting mechanism Knocked down or assembled

AVAILABLE OPTIONS

- Wire Management Cover +$23
- Numa-Lift™ +$266
- Deduct Locking Casters (4) - $68
- Custom Height (Less Than 27¾) +$27
- Custom Height (Greater Than 27¾) +$48

Nester Series
Dual Leg Nester Mechanism

ITEM INFORMATION

Item #	Description	Price
NS- (table width x table length)	Single latch application	$314

Note: Table bases and tops are not included in the Nesting Kit.

Shown above is the Dual Leg Nester Mechanism on a 101 base, with double latch application.
Qty 1 NS-36x48-2P | Qty 2 NS101-26PALC

ADDITIONAL INFORMATION

- Add NS prefix to bases when ordering to designate 5” x 5” x ¼” mounting plate (Ex. NS1012026)
- Recommended to use next larger size base when using cantilevered bases.
- **Valley Design must supply** the router pattern to ensure proper installation of the Nester Series.
- Cannot be used in conjunction with Genu-Fold3™ mechanisms.
- Standard: Black
- Call for pricing on custom size tops.

NESTING DIMENSIONS

(Top view of nested tables.)

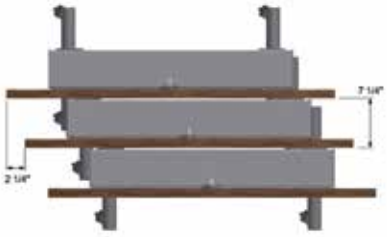

- Storage Depth = Mainbar length + (# of tables -1) x 7.25"
- Storage Width = Table width + (# of tables -1) x 2.25"
- Maximum Storage Width = Table width + 6.75" (table 5 aligns with table 1)

SPECIFICATIONS

Mounting Plate	5” x 5” x ¼” steel plates
Nester Extrusion	5½” wide by full length of extrusion. Extrusion lengths 36”, 48”, 60”, 72”
Top Size	Available for tops with a width of 18”, 24”, 30”, or 36”. Minimum top thickness of 1¼”
Assemblies	One or two latch assemblies used to latch table in set up position. Latches require recessed pocket in table top. Contact Valley Design for router pattern.
Shipped	All components included for nesting mechanism Knocked down or assembled

AVAILABLE OPTIONS

- Double Latch Application +$80
- Nester Modesty Panel Hinge +$68

Nester Series
Double Column Nester Mechanism

ITEM INFORMATION

Item #	Description	Price
NSD- (table width x table length)	Double column nester mechanism	$506

Note: Table bases and tops are not included in the Nesting Kit.

Shown above is the Double Column Nester Mechanism on double column Arch bases.
Qty 1 NSD-60RD-30 | Qty 2 NSD401-32PALC

ADDITIONAL INFORMATION

- Add NSD prefix to bases when ordering to designate 5” x 5” x ¼” mounting plate (Ex. NS1012026.2)
- Recommended to use next larger size base when using cantilevered bases.
- **Valley Design must supply** the router pattern to ensure proper installation of the Nester Series.
- Cannot be used in conjunction with Genu-Fold3™ mechanisms.
- Standard: Black
- Call for pricing on custom size tops.

NESTING DIMENSIONS

(Top view of nested tables.)

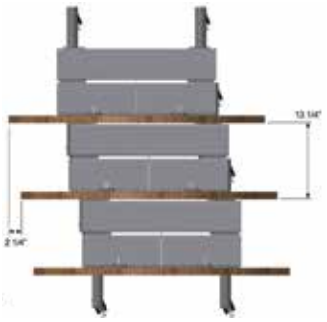

- Storage Depth
  = Mainbar length
  + (# of tables -1) x 13.25"
- Storage Width
  = Table width
  + (# of tables -1) x 2.25"
- Maximum Storage Width
  = Table width + 6.75"
  (table 5 aligns with table 1)

SPECIFICATIONS

Mounting Plate	5” x 11” x ¼” steel plates
Nester Extrusion	Two 5½” wide aluminum extrusions support tops and bases. Extrusion lengths: 36”, 48”, 60”, 72”
Top Size	Available for a 60” diameter, 48” square, 48”x 60” and 48” x 72”. Minimum top thickness of 1¼”
Assemblies	Two latch assemblies used to latch table in set up positions. Lever arm used to support top in flipped position. Latches and lever arm require recessed pocket in table top. Contact Valley Design for router pattern.
Shipped	All components included for nesting mechanism Knocked down or assembled

AVAILABLE OPTIONS

- Nester Modesty Panel Hinge +$68

Nester Series
Dual Leg Hand Crank

ITEM INFORMATION

Item#	Foot Span	Recommended Max. Table Size	Price
NSCS270QE18P	18"	24” x 72”	$928
NSCS270QE22P	22"	30” x 72”	$938
NSCS270QE26P	26”	36” x 72”	$947

Nesting Dimensions
(Top view of nested tables.)

- Storage Depth = Mainbar length + (# of tables -1) x 7.25"
- Storage Width = Table width + (# of tables -1) x 2.25"
- Maximum Storage Width = Table width + 6.75" (table 5 aligns with table 1)

REMOVEABLE HANDLE FEATURE

Removable Handle
Shown in Stored Position.

Removable Handle
Shown in Use.

SPECIFICATIONS

Base Height Adjustment Range	26¾”-46½” (with levelers and without table top)
Column, Upper Inner	63 x 63 x 2mm square tubular steel
Column, Lower Outer	70 x 70 x 2mm square tubular steel
Main Bar/Foot	3”x 3½” machined steel bar
Leveler	5⁄16”-18” x ½” long threaded stem with black nylon end
Mounting Plate	5” x 5”, ¼” steel plate
Assembly Method	Set of four (4) 8mm bolts both at the top and bottom of each column
Shipped	All components included for one table Not assembled

AVAILABLE OPTIONS

- Casters (will increase height) +$48
- CT Option +$28

Please contact Customer Service for assistance before placing your orders.

The pneumatic and electric height adjustable options require a higher level of product understanding, installation and product knowledge. **Caution should be taken at all times when assembling adjustable height products.** There are warning labels and tags on items that require close attention. Please follow all assembly instructions and warnings when unpacking and assembling adjustable height productions. Miss-use or improper handling of product will result in voiding of Valley Design warranty and possible injury to assembler/end-user. Valley Design does not hold responsibility for any damage to product due to miss-use, lack of attention to instructions.

Find intended use warranty information Online at www.ValleyDesign.biz/Warranty

VALLEY design

PARTNER AT YOUR TABLE

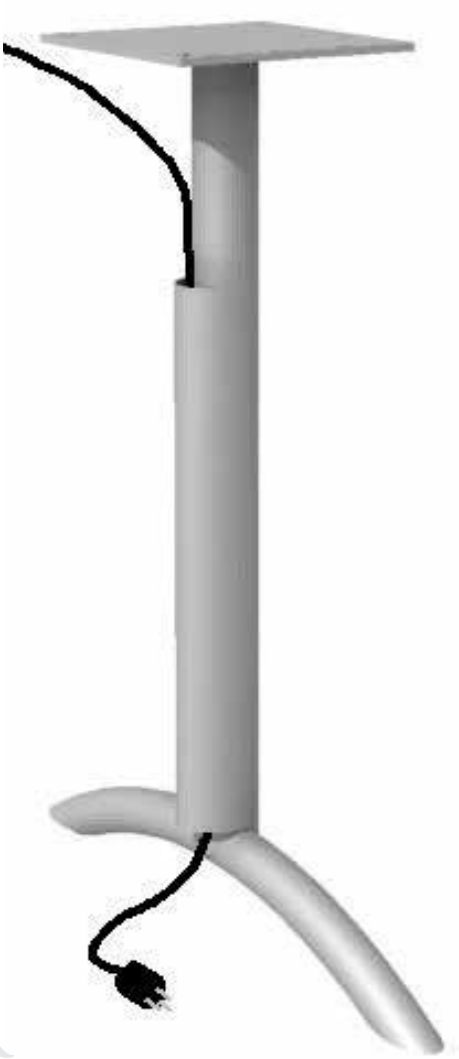

Wire Management

Don't brush your wires out of the way, organize them! Valley Design offers a variety of simple, practial solutions to manage and protect your device cables. Our full line of wire management options help you organize the clutter in a clean, discreet way. Plus many of our wire management options can be painted the same color as your base so it blends in and doesn't detract from your base design.

ORGANIZE
and cover the CLUTTER

FOR 2" COLUMNS

FOR ALUMINUM SERIES

FOR 3" COLUMNS

WIRE MANAGEMENT DOOR

WIRE MANAGEMENT HOLES

WIRE WAY MOUNTING PLATE & ACCESS HOLE

CORNER MOUNTING PLATE & WIRE ACCESS HOLE

FOR ERGOROUND

FOR DISK BASE

POWER BOX

MAGNETIC WIRE MANAGEMENT COVER

Find intended use warranty information Online at www.ValleyDesign.biz/Warranty

133 South Highway 52, Fountain, MN 55935 | ValleyDesign.biz | 507.268.4221

Wire Management
Magnetic Wire Manager Cover

ITEM INFORMATION

Item#	Description & Packaging	Price
WMCM-1	Magnetic Wire Manager Cover	$41
WMCM-5	Magnetic Wire Manager Cover	$158 (pack of 5)
WMCM-25	Magnetic Wire Manager Cover	$563 (pack of 25)

SPECIFICATIONS

- Standard dimensions: 17 ¾" length, 2" width, 1.06" depth
- 22 ga. steel
- Weight approximately 1 lb.
- Large area for wire management of multiple power and cord sizes.
- Easy installation and reposition to any metal surface.
- **Not available in brushed steel, antique bronze, or chrome.**

Wire Management
For 2" Columns

ITEM INFORMATION

Item#	Description & Packaging	Starting At
WMC -1	1-pack, single unit per box	$29
WMC -5	5-pack, packaged in individual sleeves within one box	$108
WMC -25	25-pack, packaged in individual sleeves within one box	$451
WMC2	Purchased and packaged with base	$18

NOTE: Table bases are not included in the pricing.

SPECIFICATIONS

- Easy snap-on installation allows cover to be repositioned repeatedly
- Capacity for many sizes of power and data cables
- Standard 17 ¾" length fits most Valley Design bases
- **Not available in brushed steel, antique bronze, or chrome.**

1/2" ROUND CONDUIT

FLAT OVAL CONDUIT

3/8" POWER CORDS

3/16" DATA CABLES

COMBINATION

Find intended use warranty information Online at www.ValleyDesign.biz/Warranty

Wire Management
For Aluminum Series (Due to oval shape.)

ITEM INFORMATION

Item#	Description & Packaging	Starting At
WMC 2.5 -25	25-pack, packaged in individual sleeves within one box	$564

NOTE: Table bases are not included in the pricing.

T-Base Example

SPECIFICATIONS

- Easy snap-on installation allows cover to be repositioned repeatedly
- Capacity for many sizes of power and data cables
- 17 ¾" length
- **Not available in brushed steel, antique bronze, or chrome.**

1/2" ROUND CONDUIT

FLAT OVAL CONDUIT

3/8" POWER CORDS

3/16" DATA CABLES

COMBINATION

Wire Management
For 3” Columns

ITEM INFORMATION

Item#	Description & Packaging	Starting At
WMC3 -1	1-pack, single unit per box	$34
WMC3 -5	5-pack, packaged in individual sleeves within one box	$132
WMC3 -25	25-pack, packaged in individual sleeves within one box	$563
WMC3	Purchased and packaged with base	$23

NOTE: Table bases are not included in the pricing.

X-Base Example

SPECIFICATIONS

- Easy snap-on installation allows cover to be repositioned repeatedly
- Capacity for many sizes of power and data cables
- 17 ¾” length
- **Not available in brushed steel, antique bronze, or chrome.**

1/2” ROUND CONDUIT

FLAT OVAL CONDUIT

3/8” POWER CORDS

3/16” DATA CABLES

COMBINATION

Wire Management
Wire Access Cover for ErgoRound

ITEM INFORMATION

Item#	Designator	Price
Wire Access Cover	-WAP	$34

SPECIFICATIONS

- Snap on wire access Cover specifically designed for ErgoRound Series.
- **Not available in brushed steel, antique bronze, or chrome.**

Wire Management

Wire Management Door

ITEM INFORMATION

Item#	Description & Packaging	Price
-DOOR	Bolt on wire management door.	$265

Shown on 24" Cylinder

SPECIFICATIONS

- Available on 18" and 24" Cylinders
- Bolt on Attachment
- Door Size for 18": 19" x 6 ⅝"
- Door Size for 24": 19" x 8 ⅝"
- 2 holes - 3" dia.
- **Not available in brushed steel, antique bronze, or chrome.**

Wire Management
Wire Management Door

ITEM INFORMATION

Item#	Description & Packaging	Price
WM	Hinged wire management door	$96

Note: Hinge allows you to easily push open and feed your cords through. Door blends into the base to give it a solid look.

Shown on WM2012026P

SPECIFICATIONS

- Hole size is 1" dia.
- Hinged door is ¾" wide.
- **Not available in brushed steel, antique bronze or chrome.**

Wire Management

Wire Management Holes

ITEM INFORMATION

Item#	Description & Packaging	Price
WAH	Wire management holes.	$11

Shown on WAH2012026P

SPECIFICATIONS

- 1¼" dia. holes.

Wire Management
Oval Wire Management Holes

ITEM INFORMATION

Item#	Description & Packaging	Price
WOH	Oval wire management holes	$12

Shown on WOH2012026P

SPECIFICATIONS

- 1" x 2½" slots

Wire Management
Corner Mounting Plate & Wire Access Hole

ITEM INFORMATION

Item#	Designator	Price
Corner Mounting Plate	-COR	$9

Item #	Designator	Price
Wire Access Hole	WAH	$11 per hole

Shown on WAH10002PLCCOR

SPECIFICATIONS

- Hole size is 1 ¼" dia.
- Available on all columns

Wire Management
For Disk Bases

ITEM INFORMATION

Item#	Designator	Price
Wire Management thru Hole	BWE	$44

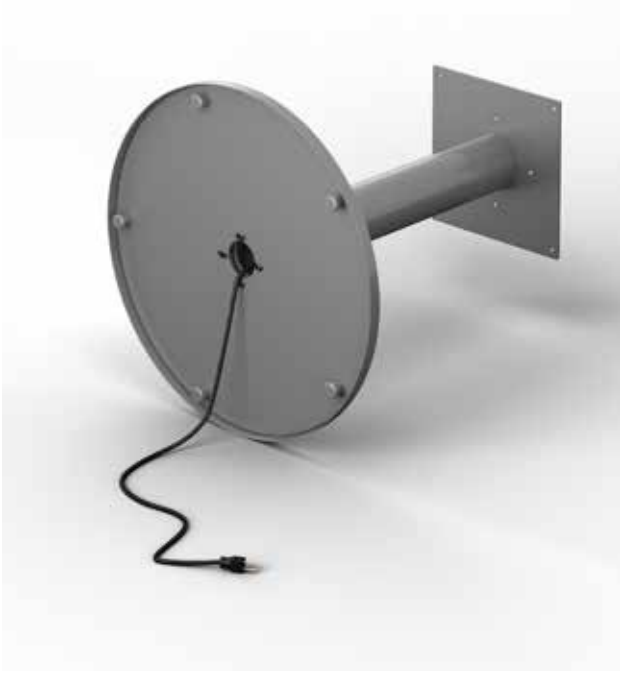

Shown on BWE1174032P

SPECIFICATIONS

- BWE- Thru holes from mounting plate to floor.
- 3” column has a 1 ⅞” dia thru hole at the bottom
- 4” column has a 2 ¼” dia thru hole at the bottom

Wire Management
Power Box

ITEM INFORMATION

Item#	Designator	Price
Power Box	-PBA	$48

Shown on 1173020P-PBA-WMH

SPECIFICATIONS

- Power Box Dimensions 12” x 12”, 3” high from top of the column to table top
- Power Box Hole Dimensions: 2” dia. on a 3” column, 3 ½” dia on a 4” column
- Bottom Hole Dimensions: 1 ½” dia. hole on a 3” column, 2” dia. hole on a 4” column

AS

VALLEY design

PARTNER AT YOUR TABLE

Aluminum Series

Aluminum definitely has its advantages! It is light, strong, environmentally friendly, and can be manipulated to create fun unique looks! This oval design gives you a slick design option that can't be denied. When you add our Genu-Fold3™ mechanism and a light-weight top, you can fold up and store without breaking your back. A pair of T-legs with our patented folding mechanisms weigh approximately 15 pounds! Don't let this light weight fool you–the bases still pass BIFMA standards for strength and durability.

LIGHTWEIGHT CHAMPION

BIFMA APPROVED

SINGLE COLUMN END BASES

DOUBLE COLUMN END BASES

SINGLE COLUMN X-BASES

INDIVIDUAL LEGS

Find intended use warranty information Online at www.ValleyDesign.biz/Warranty

133 South Highway 52, Fountain, MN 55935 | ValleyDesign.biz | 507.268.4221

Aluminum Series
Aluminum End Base – Single Column

ITEM INFORMATION

Item #	Base Spread	Max. Table Size	Mount Plate	Powder Coat	Weight
AL16PA	16"	20" x 72"	4" x 10"	$126	4.5 lbs
AL18PA	18"	24" x 72"	4" x 10"	$128	4.5 lbs
AL22PA	22"	30" x 72"	4" x 10"	$131	5 lbs
AL26PA	26"	36" x 72"	4" x 10"	$134	5 lbs

Aluminum End Base

SPECIFICATIONS

Base Height	27¾"
Column	1½" x 2½" flat oval tubular aluminum 0.10" thick wall
Cantilever (CT) Option	Column will be 3" offset from the center
Main Bar/Foot	1½" x 2½" flat oval tubular aluminum 0.10" thick wall
Levelers	5/16"-18, 1" dia. nickel plated steel
Mounting Plate	¼" thick 4" x 10" plate
Assembly Method	2-5/16-18 button head 2.5", 2-5/16-18 flat head 2.5"
Shipped	Fully Assembled

AVAILABLE OPTIONS

- Locking Casters (2") +$26 (3") +$34 (Premium) +$34
- Folding Mechanism (Single Leg) +$108
- Nesting Mechanism +$314 per set
- Genu-Flip Mechanism +$273
- CT Option +$14
- Custom Height (Less than 27¾") +$27
- Custom Height (Greater than 27¾") +$48
- Wire Access Holes +$11 each
- Wire Management Snap-On Cover +$18

Aluminum Series
Aluminum End Base – Double Column

ITEM INFORMATION

Item #	Base Spread	Max. Table Size	Mount Plate	Center to Center	Powder Coat	Weight
AL26.2PA	26"	36" x 96"	8" x 8"	14"	$204	6 lbs
AL30.2PA	30"	42" x 96"	8" x 8"	14"	$209	6.5 lbs
AL 6.2PA	36"	48" x 96"	8" x 8"	14"	$212	7.5 lbs

Aluminum End Base - Double Column

SPECIFICATIONS

Base Height	27¾"
Column	1½" x 2½" flat oval tubular aluminum 0.10" thick wall
Main Bar/Foot	1½" x 2½" flat oval tubular aluminum 0.10" thick wall
Levelers	5/16"-18, 1" dia. nickel plated steel
Mounting Plate	2 - ¼" thick 4" x 10" plates
Assembly Method	4- 5/16 -18 button head 2.5", 4- 5/16-18 flat head 2.5"
Shipped	Fully Assembled

AVAILABLE OPTIONS

- Locking Casters (2") +$26 (3") +$34 (Premium) +$34
- Folding Mechanism (Double Leg) +$249
- Nesting Mechanism +$506 per set
- Custom Height (Less than 27¾") +$27
- Custom Height (Greater than 27¾") +$48
- Wire Access Holes +$11 each
- Wire Management Snap-On Cover +$18

Aluminum Series
Aluminum X-Base – Single Column

ITEM INFORMATION

Item #	Base Spread	Max. Table Size (Round)	Max. Table Size (Square)	Mount Plate	Powder Coat	Weight
AL3018P	18" x 18"	24"	20" x 20"	10" x 10"	$253	14 lbs
AL3022P	22" x 22"	30"	26" x 26"	10" x 10"	$261	14 lbs
AL3026P	26" x 26"	34"	30" x 30"	10" x 10"	$270	15 lbs
AL3032P	32" x 32"	42"	38" x 38"	12" x 12"	$277	17 lbs
AL3036P	36" x 36"	48"	42" x 42"	12" x 12"	$285	17.5 lbs

(Column is made of 14 ga. steel)

Aluminum X-Base

SPECIFICATIONS

Base Height	27¾"
Column	3” dia. round tube, 14 ga. steel
Main Bar/Foot	1½” x 2½” flat oval tubular aluminum 0.10” thick wall
Levelers	5⁄16”-18, 1” dia. nickel plated steel
Mounting Plate	Stamped 7 or 11 ga. steel with welded reinforcement.
Assembly Method	½-13 flange 2” flange bolt for mounting plate, 4 - 5⁄16-18 1.25” socket head for column to base
Shipped	Knocked Down

AVAILABLE OPTIONS

- Locking Casters (2”) +$51 (3”) +$68 (Premium) +$68
- Flip-Top Bases (32” or Less) +$94
- Detachable Flip-Top +$94
- Genu-Flip Mechanism (max. 42” top) +$273
- Custom Height (Less than 27¾”) +$27
- Custom Height (Greater than 27¾”) +$48
- Wire Access Holes +$11 each
- Wire Management Snap-On Cover +$21
- Wire Management Door +$96
- Foot Ring +$120

Aluminum Series
Aluminum Post Legs – Individual

ITEM INFORMATION

Item #	Boomerang Plate	Powder Coat	Weight
100AL001P •Includes levelers	5.5" x 5.5"	$79	3.5 lbs
100AL002P •Includes locking casters	5.5" x 5.5"	$92	4 lbs
100AL003P •Includes locking premium casters	5.5" x 5.5"	$96	4 lbs

***Note: Boomerang Plate comes standard on Aluminum Series Post Legs.**

SPECIFICATIONS

Base Height	27¾"
Column	1½" x 2½" flat oval tubular aluminum 0.10" thick wall
Levelers	5/16"-18, 1" dia. nickel plated steel
Boomerang Plate	5/16" steel boomerang shape
Assembly Method	2- 5/16-18 flat head 1.5"
Shipped	Knocked Down

AVAILABLE OPTIONS

- Custom Height (Less than 27¾") +$27
- Custom Height (Greater than 27¾") +$48
- Oval Wire Management Hole +$12

Aluminum Series
Aluminum Post Legs – Set of 4

ITEM INFORMATION

Item #	Boomerang Plate	Powder Coat	Weight
100AL001P-4 •Includes levelers	5.5" x 5.5"	$282	14 lbs
100AL002P-4 •Includes locking casters	5.5" x 5.5"	$330	16 lbs
100AL003P-4 •Includes locking premium casters	5.5" x 5.5"	$346	16 lbs

***Note: Boomerang Plate comes standard on Aluminum Series Post Legs. Prices per set of 4 legs.**

SPECIFICATIONS

Base Height	27¾"
Column	1½" x 2½" flat oval tubular aluminum 0.10" thick wall
Levelers	5/16"-18, 1" dia. nickel plated steel
Boomerang Plate	5/16" steel boomerang shape
Assembly Method	Qty. 4, 2- 5/16-18 flat head 1.5"
Shipped	Knocked Down

AVAILABLE OPTIONS

- Custom Height (Less than 27¾") +$27
- Custom Height (Greater than 27¾") +$48
- Oval Wire Management Hole +$12

CS

VALLEY design

Column Series

Many times a simple solution is the best. Valley Design's Classic Column Series provides simple, elegant solutions to many support problems. They span the range from 1 ½" diameter columns that serve as inexpensive legs to a 28" diameter cylinder that will support a 72" round table. Each has available options that help you find the exact solution to your challenge.

PARTNER AT YOUR TABLE

SIMPLE ELEGANCE combined with VERSATILITY

ROUND COLUMNS & CYLINDERS

SQUARE COLUMNS

BENT AND STRAIGHT LEGS

TORNADO TAPERED LEGS

Find intended use warranty information Online at www.ValleyDesign.biz/Warranty

133 South Highway 52, Fountain, MN 55935 | ValleyDesign.biz | 507.268.4221

Column Series
Classic Column – Round Column

ITEM INFORMATION

Item#	Diameter	Mount Plate	Tube Gauge	Powder Coat	Chrome	Premium Color
10002	2"	4" x 4"	14	$59	$85	$64
10003	3"	6" x 6"	14	$83	$124	$86
10004	4"	8" x 8"	14	$114	$158	$119
10005	5"	8" x 8"	14	$141	$181	$147
10006	6"	8" x 8"	14	$158	$199	$162

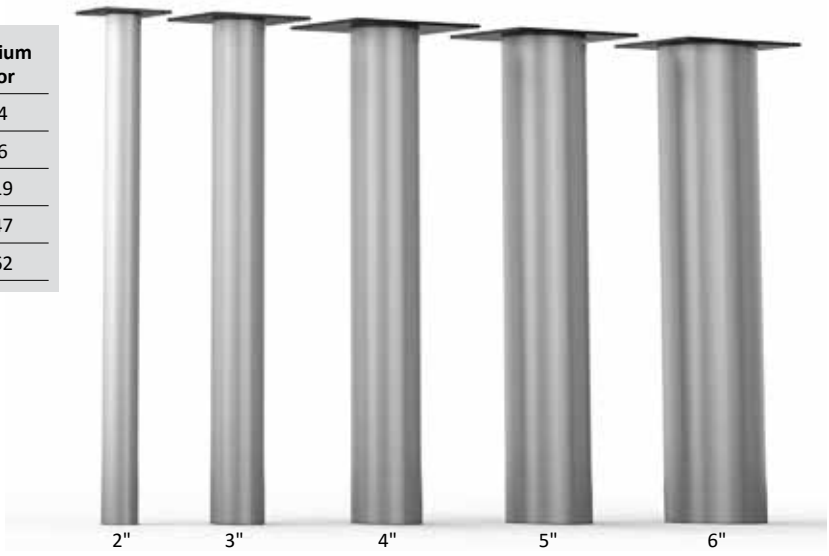

SPECIFICATIONS

Base Height	27 ¾"
Column	14 ga. steel
Levelers	1 ¾" dia., black plastic
Mounting Plate	7 ga. steel
Assembly Method	Flathead cap screws to hold mounting plate to column
Shipped	Assembled

AVAILABLE OPTIONS

- 4" Leveler (only available in 4"-6") +$9
- Boomerang Removable Mounting Plate (only available on 2") +$9
- Corner Mounting Plate +$9 (only available on 2", 3", 4")
- Wire Access Holes +$11 each
- Wire Way Mounting Plate Substitute (only available on 4"-6") +$0
- Wire Management Door +$96
- Wire Management Cover (2" and 3" columns only) +$18
- Custom Height (less than 27¾") +$27
- Custom Height (greater than 27¾")
  2" dia. column +$41
  3" dia. column +$48
  4" dia. column +$62
  5" dia. column +$83
  6" dia. column +$101

Column Series
Classic Column – Cylinders

ITEM INFORMATION

Item#	Diameter	Mount Plate	Tube Gauge	Table Size (Round)	Powder Coat	Chrome	Premium Color
10018	18"	3⁄16" Tabs	14	36"	$1,164	$1,522	$1,210
10024	24"	3⁄16" Tabs	14	54"	$1,237	N/A	$1,285
10028	28"	3⁄16" Tabs	14	72"	$1,478	N/A	$1,539

18"

24"

28"

SPECIFICATIONS

Base Height	27¾"
Column	14 ga. steel
Levelers	1” dia., nickel plated
Mounting Plate	4 - 3⁄16” thick tabs
Shipped	Assembled

AVAILABLE OPTIONS

- Wire Access Holes +$11 each
- Wire Access Panel +$265

Column Series
Classic Column – Square Columns

ITEM INFORMATION

Item#	Dimensions	Mount Plate	Tube Gauge	Powder Coat
10002SQ	2" x 2"	6" x 6"	14	$88
10002.75SQ	2 ¾" x 2 ¾"	8" x 8"	14	$98

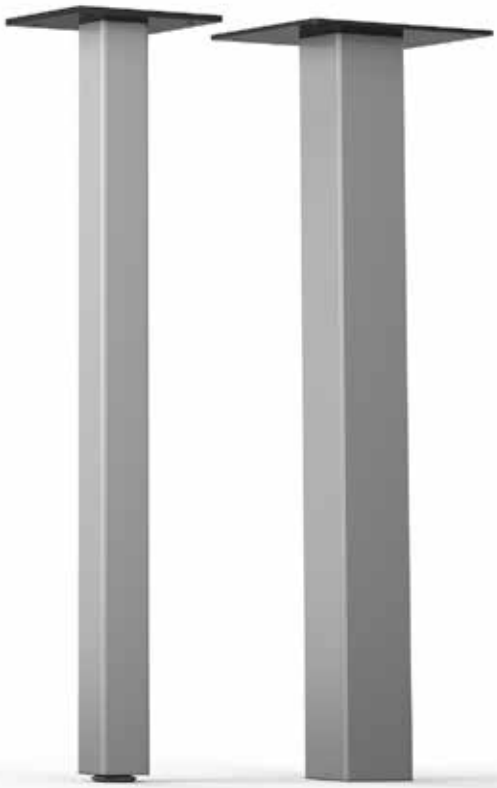

SPECIFICATIONS

Base Height	27¾"
Column	2” x 2” or 2¾” x 2 /₄” 14 ga. steel
Levelers	1” dia., nickel plated
Mounting Plate	¼” thick, bolted to tubing
Assembly Method	Flathead cap screws to hold mounting plate to column
Shipped	Assembled

AVAILABLE OPTIONS

- Wire Management Hole +$11
- Custom Height (Less than 27¾”) +$27
- Custom Height (Greater than 27¾”)
  2” Square +$48
  2¾” Square +$62

Column Series
Bent & Straight Legs

ITEM INFORMATION

Item #	Description	Mounting Plate	Powder Coat	Chrome
B100015	Bent leg	4" x 4"	$87	$137*
S100015	Straight Leg	4" x 4"	$83	$129

SPECIFICATIONS

Base Height	27¾"
Column	1½" dia., 11 ga. steel
Levelers	2⅛" dia. x 2¼" high, black
Mounting Plate	¼" thick, welded to tubing
Shipped	Assembled

***Not available in brushed chrome finish**

AVAILABLE OPTIONS

- Custom Height (Less than 27¾") +$27
- Custom Height (Greater than 27¾") +$48
- Locking Casters +$0

Column Series
Tornado Tapered Columns

ITEM INFORMATION

Item #	Description	Mounting Plate	Powder Coat	Chrome	Premium Color
10000T	3" top diameter	6” x 6”	$129	$177	$134
20000T	2¼" top diameter	6” x 6”	$117	$162	$121

SPECIFICATIONS

Base Height	27¾"
Column	14 ga. steel
Levelers	2⅛” dia. x 2¼” high black
Mounting Plate	¼” thick, bolted to tubing
Assembly Method	Flathead cap screws to hold mounting plate to column
Shipped	Assembled

AVAILABLE OPTIONS

- Custom Height (Less than 27¾”) +$27
- Custom Height (Greater than 27¾”) N/A
- Locking Casters +$0

AL

VALLEY design

Angled Leg Series

The Angled Leg series introduces an inventive new design which combines versatility with modern style. This innovative table base design features an angled leg that suits a variety of base configurations.

VERSATILITY combined with MODERN STYLE

2" ANGLED LEG BASES

2 3/4" ANGLED LEG BASES

PARTNER AT YOUR TABLE

Find intended use warranty information Online at www.ValleyDesign.biz/Warranty

133 South Highway 52, Fountain, MN 55935 | ValleyDesign.biz | 507.268.4221

Angled Leg Series

Angled Leg Bases

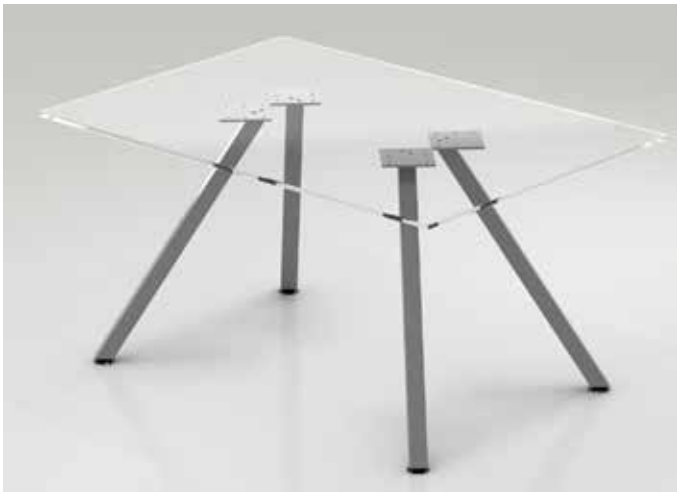

ITEM INFORMATION

Item#	Column Dimension	Base Height	Angle	Mount Plate	Powder Coat
2000P22SQA-16.75	2" x 2"	16 ¾"	22°	6" x 6"	$98
2000P22SQA-27.75	2" x 2"	27 ¾"	22°	6" x 6"	$98
2000P22SQA-40.75	2" x 2"	40 ¾"	22°	6" x 6"	$125
2.7500P22SQA-16.75	2 ¾" x 2 ¾"	16 ¾"	22°	8" x 8"	$101
2.7500P22SQA-27.75	2 ¾" x 2 ¾"	27 ¾"	22°	8" x 8"	$101
2.7500P22SQA-40.75	2 ¾" x 2 ¾"	40 ¾"	22°	8" x 8"	$127
2.7500P30SQ-27.75**	**2 ¾" x 2 ¾"**	**27 ¾"**	**30°**	**8" x 8"**	**$101**

****Item number to be used when using a table top 42" or 48"**

***Note: Due to the versatility of this base, Valley Design highly recommends conducting self-testing with your tops and base formations.**

V FORMATION

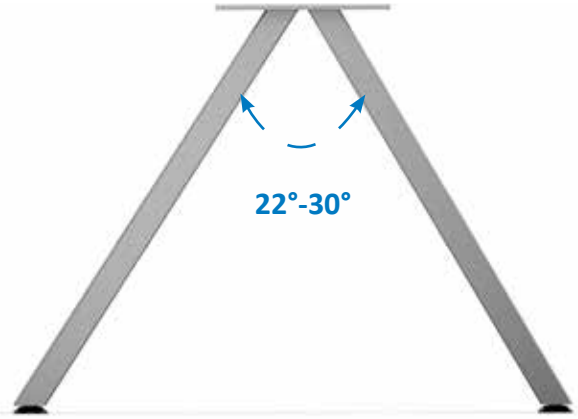

Picture above shows two column legs in V Formation. Multiple variations can be used with this column. Pricing is done per column.

SPECIFICATIONS

Base Height	16 ¾", 27 ¾", and 40 ¾"
Column	2"x 2", 16 ga. square steel tube, 2¾"x 2¾", 14 ga. square steel tube
Leveler	2" x 2": 5⁄16" - 18 x 1" L black plastic 1½" dia. 2¾"x 2¾": 5⁄16" - 18 x 1" L black plastic 2½" dia.
Mounting Plate	2" x 2": ¼" thick, bolted to tubing 2¾"x 2¾": ¼" thick, bolted to tubing
Assembly Method	Flathead cap screws to hold mounting plate to column
Shipped	One (1) per box, un-assembled

AVAILABLE OPTIONS

- WM Holes + $11 each
  (Available on 2 ¾" powder coat leg only)

***Note: 30°angle is recommended for tops 42" or wider.**

Angled Leg Series
Sample Configurations

***Note: Due to the versatility of this base, Valley Design highly recommends conducting self-testing with your tops and base formations.**

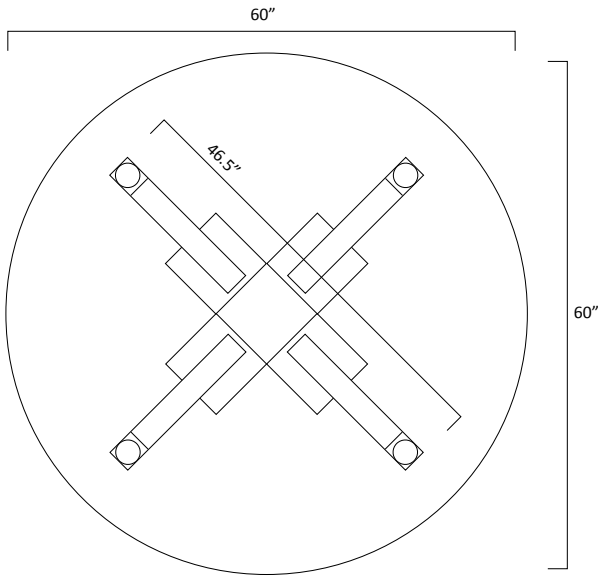

Suggested Max Top size of 60” dia.

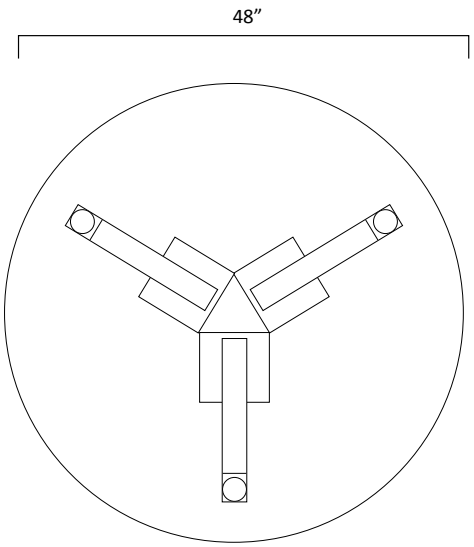

Suggested Max Top size of 48” dia.

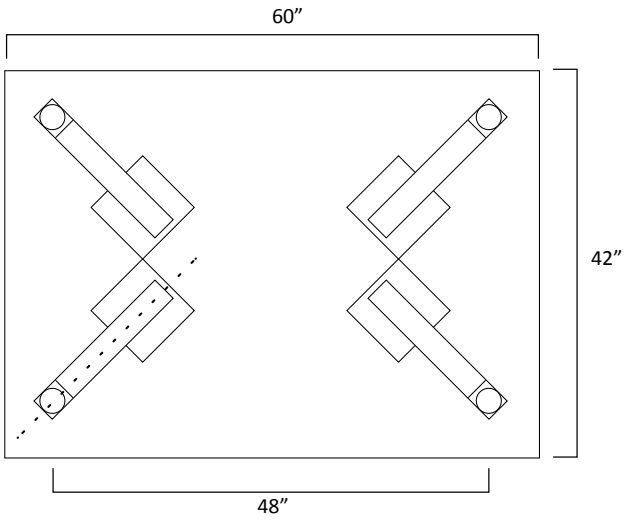

Suggested Max Top size of 42” x 60”

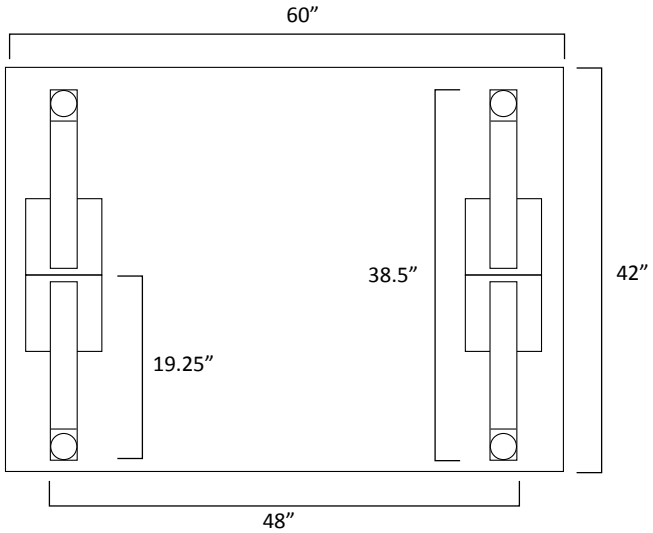

Suggested Max Top size of 42” x 60”

TS

VALLEY design

PARTNER AT YOUR TABLE

Tubular Series

If there is a table that we can't support with a Tubular Series base, we haven't found it yet. The simplicity of the 2" diameter tubular base allows for nearly unlimited flexibility in creating different sizes of bases. The same simplicity creates a timeless appearance, whether it is with welded and polished steel end caps, durable nylon end caps, or a graceful bend to the floor.

MAXIMUM VERSATILITY

SINGLE COLUMN END BASES

DOUBLE COLUMN END BASES

SINGLE COLUMN X-BASES

MULTI-COLUMN X-BASES

Find intended use warranty information Online at www.ValleyDesign.biz/Warranty

133 South Highway 52, Fountain, MN 55935 | ValleyDesign.biz | 507.268.4221

Tubular Series
101 Radiused End Base – Single Column

ITEM INFORMATION

Item#	Base Spread	Max. Table Size	Mount Plate	Powder Coat	Chrome	Premium Color
1012016	16"	20" x 72"	10" x 10"	$124	$143	$128
1012018	18"	24" x 72"	10" x 10"	$124	$143	$128
1012020	20"	28" x 72"	10" x 10"	$125	$145	$129
1012022	22"	30" x 72"	10" x 10"	$125	$145	$129
1012026	26"	36" x 72	10" x 10"	$126	$146	$131
1012030	30"	40" x 72	10" x 10"	$136	$158	$143
1012032	32"	42" x 72"	12" x 12"	$163	$187	$168
1012036	36"	48" x 72	12" x 12"	$166	$192	$171

101 Radiused End Base

SPECIFICATIONS

Base Height	27¾" (with levelers and without table top)
Column	2” dia. x 14 ga. steel
Cantilever (CT) Option	Column will be 3” offset from the center
Main Bar/Foot	2” dia., 14 ga. steel
Levelers	5⁄16”-18, 1” dia. nickel plated steel
Mounting Plate	Stamped 11 ga. steel with welded reinforcement
Assembly Method	Qty 1 ½-13 Threaded Rod Assembly
Shipped	Knocked down (fully assembled optional)

AVAILABLE OPTIONS

- Locking Casters (2”) +$26, (3”) +$34, (Premium) +$34
- Folding Mechanism (Single Leg) +$108
- Nesting Mechanism +$314 per set
- Genu-Flip Kit +$273
- CT Option +$14
- Edge Mount +$0
- Custom Height (Less than 27¾) +$27
- Custom Height (Greater than 27¾) +$48
- Assembly +$14
- Wire Management Door +$96
- Wire Management Snap-On Cover +$18
- Wire Access Holes +$14

Tubular Series
101 Radiused End Base – Double Column

ITEM INFORMATION

Item#	Base Spread	Max. Table Size	Mount Plate	Center to Center	Powder Coat	Chrome	Premium Color
1012026.2	26"	38" x 96"	10" x 10"	14"	$170	$204	$181
1012030.2	30"	42" x 96"	10" x 10"	14"	$182	$215	$191
1012032.2	32"	44" x 96"	10" x 10"	14"	$188	$222	$194
1012036.2	36"	48" x 96"	10" x 10"	14"	$193	$226	$201
1012042.2	42"	54" x 96"	10" x 10"	22"	$220	$253	$228

101 Radiused End Base – Double Columns

SPECIFICATIONS

Base Height	27¾" (with levelers and without table top)
Column	2” dia. x 14 ga. steel
Main Bar/Foot	2” dia., 14 ga. steel
Levelers	5/16”-18, 1” dia. nickel plated steel
Mounting Plate	Stamped 11 ga. steel with welded reinforcement
Assembly Method	Qty 2 ½-13 Threaded Rod Assembly
Shipped	Knocked down (fully assembled optional)

AVAILABLE OPTIONS

- Locking Casters (2”) +$26, (3”) +$34, (Premium) +$34
- Folding Mechanism (Double Leg) +$238
- Nesting Mechanism +$506 per set
- Edge Mount +$0
- Custom Height (Less than 27¾) +$27
- Custom Height (Greater than 27¾) +$48
- Assembly +$14
- Wire Management Door +$96
- Wire Management Snap-On Cover +$18
- Wire Access Holes +$11

Tubular Series | Ratchet Option

101 Ratchet – Single Column

ITEM INFORMATION

Item#	Base Spread	Max. Table Size	Mount Plate	Powder Coat
RA1012018	18"	24" x 72"	8" x 8"	$273
RA1012022	22"	30" x 72"	8" x 8"	$274
RA1012026	26"	36" x 72"	8" x 8"	$275

101 Ratchet End Base

SPECIFICATIONS

Base Height	Standard Height: 23” with Hidden Wheels: 23” with 2” Casters: 25” with Nester Mechanism: 24” with GenuFlip and GenuFold: 26”
Adjustment Range	**Standard:** 9.45 “ **Ratchet:** 13 positions in .78” increments
Column	**Outer:** 2 ¼” dia., 14 ga. steel **Inner:** 2”, 14. ga steel
Cantilever (CT) Option	Column will be 3” offset from the center
Main Bar/Foot	2” dia., 14 ga. steel
Levelers	5/16”-18, 1” dia. nickel plated steel
Mounting Plate	Stamped 12 ga. steel with welded reinforcement
Assembly Method	Qty 4 M8 screws to attach mounting plate, qty 1 M12 to attach foot to column
Shipped	Fully Assembled

AVAILABLE OPTIONS

- Locking Casters (2”) +$26, (3”) +$34, (Premium) +$34
- Folding Mechanism +$108
- Nesting Mechanism +$314 per set
- Genu-Flip Kit +$273
- CT Option +$14

Find intended use warranty information Online at www.ValleyDesign.biz/Warranty

Tubular Series | Ratchet Option

101 Ratchet – Double Column

ITEM INFORMATION

Item#	Base Spread	Max. Table Size	Mount Plate	Powder Coat
RA1012026.2	26"	38" x 96"	8" x 8"	$467
RA1012030.2	30"	42" x 96"	8" x 8"	$474
RA1012036.2	36"	48" x 96"	8" x 8"	$482

101 Ratchet End Base – Double Column

SPECIFICATIONS

Base Height	Standard Height: 23” with Hidden Wheels: 23” with 2” Casters: 25” with Nester Mechanism: 24” with GenuFlip and GenuFold: 26”
Adjustment Range	**Standard:** 9.45 “ **Ratchet:** 13 positions in .78” increments
Column	**Outer:** 2 ¼” dia., 14 ga. steel **Inner:** 2”, 14. ga steel
Main Bar/Foot	2” dia. 14 ga. steel
Levelers	5/16”-18, 1” dia.r nickel plated steel
Mounting Plate	Stamped 12 ga. steel with welded reinforcement
Assembly Method	Qty 4 M8 screws to attach mounting plate, qty 2 M12 to attach foot to column
Shipped	Fully Assembled

AVAILABLE OPTIONS

- Locking Casters (2”) +$26, (3”) +$34, (Premium) +$34
- Folding Mechanism +$238
- Nesting Mechanism +$506 per set

Find intended use warranty information Online at www.ValleyDesign.biz/Warranty

Tubular Series
111 Radiused X-Base – Single Column

ITEM INFORMATION

Item#	Base Spread	Max. Table Size (Round)	Max. Table Size (Square)	Mount Plate	Powder Coat	Chrome	Premium Color
1113018	18" x 18"	24"	20" x 20"	10" x 10"	$192	$222	$199
1113022	22" x 22"	30"	26" x 26"	10" x 10"	$193	$225	$200
11130226	22" x 26"	N/A	26" x 32"	10" x 10"	$194	$229	$201
1113026	26" x 26"	34"	30" x 30"	10" x 10"	$197	$230	$202
11130236	26" x 36"	N/A	30" x 42"	12" x 12"	$217	$250	$225
1113030	30" x 30"	38"	34" x 34"	10" x 10"	$209	$242	$217
1113032	32" x 32"	42"	38" x 38	12" x 12"	$210	$243	$218
1113036	36" x 36"	48"	42" x 42"	12" x 12"	$219	$281	$228
1113038	38" x 38"	48"	42" x 42"	12" x 12"	$233	$290	$243

101 Radiused X-Base

SPECIFICATIONS

Base Height	27 ¾"
Column	3" dia., 14 ga. steel
Main Bar/Foot	2" dia., 14 ga. steel
Levelers	5/16"-18 , 1" dia. nickel plated steel
Mounting Plate	Stamped 7 ga. steel with welded reinforcement
Assembly Method	Qty 1 ½-13 Threaded Rod Assembly
Shipped	Knocked down

AVAILABLE OPTIONS

- Locking Casters (2") +$51, (3") +$68, (Premium) +$68
- Flip Top Bases (32" or less) +$94
- Detachable Flip Top +$94
- Genu-Flip Mechanism (max. 42" top) +$126
- Custom Height (Less than 27¾) +$27
- Custom Height (Greater than 27¾) +$48
- Wire Management Door +$96
- Wire Management Snap-On Cover +$21
- Wire Access Holes +$11 each
- Numa-Lift Adjustable Column +$266
- Foot Ring +$120

Tubular Series
111 Radiused X-Base – Four Columns

ITEM INFORMATION

Item#	Base Spread	Max. Table Size (Round)	Max. Table Size (Square)	Mount Plate	Powder Coat	Premium Color
1112032.4	32" x 32"	60"	48" x 48"	10" x 10	$340	$353
1112036.4	36" x 36"	72"	54" x 54"	10" x 10"	$376	$391

111 Radiused X-Base - Four Columns

SPECIFICATIONS

Base Height	27¾"
Column	2” dia., 14 ga. steel
Main Bar/Foot	2” dia.,14 ga. steel
Levelers	5⁄16”-18, 1” dia. nickel plated steel
Mounting Plate	Stamped 7 ga. steel with welded reinforcement
Assembly Method	Qty 4 ½-13 Threaded Rod Assembly
Shipped	Knocked down

***Not available in chrome finish.**

AVAILABLE OPTIONS

- Locking Casters (2”) +$51, (3”) +$68, (Premium) +$68
- Custom Height (Less than 27¾) +$107
- Custom Height (Greater than 27¾) +$193
- Wire Management Door +$96
- Wire Management Snap-On Cover +$18
- Wire Access Holes +$11 each

Tubular Series
111 Radiused X-Base – Five Columns

ITEM INFORMATION

Item#	Base Spread	Max. Table Size (Round)	Max. Table Size (Square)	Mount Plate	Powder Coat	Chrome	Premium Color
1113036.5	36" x 36"	72"	54" x 54	10" x 10"	$422	$579	$443

111 Radiused X-Base - Five Columns

SPECIFICATIONS

Base Height	27¾"
Column	**Outer:** 2" dia., 14 ga. steel **Inner:** 3" dia., 14 ga. steel
Main Bar/Foot	2" dia., 14 ga. steel
Levelers	5/16"-18, 1" dia. nickel plated steel
Mounting Plate	Stamped 7 ga. steel with welded reinforcement
Assembly Method	Qty 5 ½-13 Threaded Rod Assembly
Shipped	Knocked down

AVAILABLE OPTIONS

- Locking Casters (2") +$51, (3") +$68, (Premium) +$68
- Custom Height (Less than 27¾) +$134
- Custom Height (Greater than 27¾) +$241
- Wire Management Door +$96
- Wire Management Snap-On Cover +$21
- Wire Access Holes +$11 each

Tubular Series | Bullnosed

202 Bullnosed End Base – Single Column

ITEM INFORMATION

Item#	Base Spread	Max. Table Size	Mount Plate	Powder Coat	Chrome	Premium Color
2022016	16"	20" x 72"	10" x 10"	$113	$132	$118
2022018	18"	24" x 72"	10" x 10"	$113	$132	$118
2022020	20"	28" x 72"	10" x 10"	$114	$133	$119
2022022	22"	30" x 72"	10" x 10"	$114	$133	$119
2022026	26"	36" x 72"	10" x 10"	$116	$135	$121
2022030	30"	40" x 72	10" x 10"	$126	$148	$132
2022032	32"	42" x 72	12" x 12"	$151	$175	$158
2022036	36"	48" x 72	12" x 12"	$155	$180	$161

202 Bullnosed End Base

SPECIFICATIONS

Base Height	27¾"
Column	2” dia., 14 ga. steel
Cantilever (CT) Option	Column will be 3” offset from the center
Main Bar/Foot	2” dia., 14 ga. steel
Knock-In Caps	Black Nylon Plastic
Levelers	5⁄16”-18, 1” dia. nickel plated base.
Mounting Plate	Stamped 11 ga. steel with welded reinforcement
Assembly Method	Qty 1 ½-13 Threaded Rod Assembly
Shipped	Knocked down (fully assembled optional)

AVAILABLE OPTIONS

- Locking Casters (2”) +$26, (3”) +$34, (Premium) +$34
- Folding Mechanism +$108 per set
- Nesting Mechanism +$314 per set
- Genu-Flip Kit +$273
- CT Option +$14
- Edge Mount +$0
- Custom Height (Less than 27¾) +$27
- Custom Height (Greater than 27¾) +$48
- Assembly +$14
- Wire Management Door +$96
- Wire Management Snap-On Cover +$18
- Wire Access Holes +$11 each

Tubular Series | Bullnosed

202 Bullnosed End Base – Double Columns

ITEM INFORMATION

Item#	Base Spread	Max. Table Size	Mount Plate	Center to Center	Powder Coat	Chrome	Premium Color
2022026.2	26"	38" x 96"	10" x 10"	14"	$162	$212	$178
2022030.2	30"	42" x 96"	10" x 10"	14"	$162	$212	$178
2022032.2	32"	44" x 96"	10" x 10"	14"	$171	$219	$180
2022036.2	36"	48" x 96"	10" x 10"	14"	$182	$230	$192
2022042.2	42"	54" x 96"	10" x 10"	22"	$210	$242	$217

202 Bullnosed End Base – Double Column

SPECIFICATIONS

Base Height	27¾"
Column	2” dia., 14 ga. steel
Main Bar/Foot	2” dia., 14 ga. steel
Knock-In Caps	Black Nylon Plastic
Levelers	5⁄16”-18, 1” dia. nickel plated base.
Mounting Plate	Stamped 11 ga. steel with welded reinforcement
Assembly Method	Qty 2 ½-13 Threaded Rod Assembly
Shipped	Knocked down (fully assembled optional)

AVAILABLE OPTIONS

- Locking Casters (2”) +$26, (3”) +$34, (Premium) +$34
- Folding Mechanism +$239
- Nesting Mechanism +$ 506 per set
- Edge Mount +$0
- Custom Height (Less than 27¾) +$27
- Custom Height (Greater than 27¾) +$48
- Assembly +$14
- Wire Management Door +$96
- Wire Management Snap-On Cover +$18
- Wire Access Holes +$11 each

Tubular Series | Bullnosed

212 Bullnosed X-Base – Single Column

ITEM INFORMATION

Item#	Base Spread	Max. Table Size (Round)	Max. Table Size (Square)	Mount Plate	Powder Coat	Chrome	Premium Color
2123018	18" x 18"	24"	20" x 20"	10" x 10	$169	$200	$178
2123022	22" x 22"	32"	26" x 26"	10" x 10"	$170	$202	$180
21230226	22" x 26"	N/A	26" x 32"	10" x 10"	$173	$209	$181
2123026	26" x 26"	34"	30" x 30"	10" x 10"	$175	$210	$182
21230236	26" x 36"	N/A	30" x 42"	12" x 12"	$196	$229	$202
2123030	30" x 30"	38"	34" x 34"	10" x 10"	$187	$225	$194
2123032	32" x 32"	42"	38" x 38"	12" x 12"	$192	$247	$199
2123036	36" x 36"	48"	42" x 42"	12" x 12"	$198	$260	$207
2123038	38" x 38"	48"	42" x 42"	12" x 12"	$210	$269	$222

212 Bullnosed X-Base

SPECIFICATIONS

Base Height	27¾"
Column	3" dia., 14 ga. steel
Main Bar/Foot	2" dia., 14 ga. steel
Knock-In Cap	Black Nylon Plastic
Levelers	5/16"-18 , 1" dia. nickel plated steel
Mounting Plate	Stamped 7 ga. steel with welded reinforcement
Assembly Method	Qty 1 ½-13 Threaded Rod Assembly
Shipped	Knocked down

AVAILABLE OPTIONS

- Locking Casters (2") +$51, (3") +$68, (Premium) +$68
- Flip Top Bases (32" or less) +$94
- Detachable Flip Top +$94
- Genu-Flip Mechanism (max. 42" top) +$126
- Custom Height (Less than 27¾) +$27
- Custom Height (Greater than 27¾) +$48
- Wire Management Door +$96
- Wire Management Snap-On Cover +$21
- Wire Access Holes +$11 each
- Numa-Lift Adjustable Column +$260
- Foot Ring +$120

Tubular Series | Bullnosed

212 Bullnosed X-Base – Four Columns

ITEM INFORMATION

Item#	Base Spread	Max. Table Size (Round)	Max. Table Size (Square)	Mount Plate	Powder Coat	Premium Color
2122032.4	32" x 32"	60"	48" x 48"	10" x 10"	$318	$332
2122036.4	36" x 36"	72"	54" x 54"	10" x 10"	$353	$368

212 Bullnosed X-Base – Four Columns

SPECIFICATIONS

Base Height	27¾"
Column	2” dia., 14 ga. steel
Main Bar/Foot	2” dia.,14 ga. steel
Knock-In Caps	Black Nylon Plastic
Levelers	5/16”-18, 1” dia. nickel plated steel
Mounting Plate	Stamped 7 ga. steel with welded reinforcement
Assembly Method	Qty 4 ½-13 Threaded Rod Assembly
Shipped	Knocked down

***Not available in chrome finish.**

AVAILABLE OPTIONS

- Locking Casters (2”) +$51, (3”) +$68, (Premium) +$68
- Custom Height (Less than 27¾) +$107
- Custom Height (Greater than 27¾) +$193
- Wire Management Door +$96
- Wire Management Snap-On Cover +$18
- Wire Access Holes +$11 each

Tubular Series | Bullnosed

212 Bullnosed X-Base – Five Columns

ITEM INFORMATION

Item#	Base Spread	Max. Table Size (Round)	Max. Table Size (Square)	Mount Plate	Powder Coat	Chrome	Premium Color
2123036.5	36" x 36"	72"	54" x 54"	10" x 10"	$400	$498	$421

212 Bullnosed X-Base – Five Columns

SPECIFICATIONS

Base Height	27¾"
Column	**Outer:** 2" dia., 14 ga. steel **Inner:** 3" dia., 14 ga. steel
Main Bar/Foot	2" dia., 14 ga. steel
Knock-In Cap	Black Nylon Plastic
Levelers	5/16"-18, 1" diameter nickel plated steel
Mounting Plate	Stamped 7 ga. steel with welded reinforcement
Assembly Method	Qty 5 ½-13 Threaded Rod Assembly
Shipped	Knocked down

AVAILABLE OPTIONS

- Locking Casters (2") +$51, (3") +$68, (Premium) +$68
- Custom Height (Less than 27¾) +$134
- Custom Height (Greater than 27¾) +$241
- Wire Management Door +$96
- Wire Management Snap-On Cover +$21
- Wire Access Holes +$11 each

Tubular Series | Bullnosed Ratchet Option

202 Bullnosed Ratchet – Single Column

ITEM INFORMATION

Item#	Base Spread	Max. Table Size	Mount Plate	Powder Coat
RA2022018	18"	24" x 72"	8" x 8"	$262
RA2022022	22"	30" x 72"	8" x 8"	$263
RA2022026	26"	36" x 72"	8" x 8"	$264

202 Bullnosed Ratchet End Base

SPECIFICATIONS

Base Height	Standard Height: 23” with Hidden Wheels: 23” with 2” Casters: 25” with Nester Mechanism: 24” with GenuFlip and GenuFold: 26”
Adjustment Range	**Standard:** 9.45 “ **Ratchet:** 13 positions in .78” increments
Column	**Outer:** 2 ¼” dia., 14 ga. steel **Inner:** 2”, 14. ga steel
Cantilever (CT) Option	Column will be 3” offset from the center
Main Bar/Foot	2” dia., 14 ga. steel
Knock-In Cap	Black Nylon Plastic
Levelers	⅜”-18, 1” dia. nickel plated steel
Mounting Plate	Stamped 12 ga. steel with welded reinforcement
Assembly Method	Qty 4 M8 screws to attach mounting plate, qty 1 M12 to attach foot to column
Shipped	Fully Assembled

AVAILABLE OPTIONS

- Locking Casters (2”) +$26, (3”) +$34, (Premium) +$34
- Folding Mechanism (Single Leg) +$108
- Nesting Mechanism +$314 per set
- Genu-Flip Kit +$273
- CT Option +$14

Find intended use warranty information Online at www.ValleyDesign.biz/Warranty

Tubular Series | Bullnosed Ratchet Option

202 Bullnosed Ratchet – Double Column

ITEM INFORMATION

Item#	Base Spread	Max. Table Size	Mount Plate	Powder Coat
RA2022026.2	26"	38" x 96"	8" x 8"	$456
RA2022030.2	30"	42" x 96"	8" x 8"	$463
RA2022036.2	36"	48" x 96"	8" x 8"	$471

SPECIFICATIONS

Base Height	Starting Height: 23”
Adjustment Range	9.45 “
Column	**Outer:** 2 ¼” dia., 14 ga. steel **Inner:** 2”, 14. ga steel
Main Bar/Foot	2” dia., 14 ga. steel
Knock-In Cap	Black Nylon Plastic
Levelers	5⁄16”-18, 1” dia. nickel plated steel
Mounting Plate	Stamped 12 ga. steel with welded reinforcement
Assembly Method	Qty 8 M8 screws to attach mounting plate, qty 1 M12 to attach foot to column
Shipped	Fully Assembled

AVAILABLE OPTIONS

- Locking Casters (2”) +$26, (3”) +$34, (Premium) +$34
- Folding Mechanism +$234
- Nesting Mechanism +$506 per set

Tubular Series | Concealed Caster

221 Concealed Caster End Base – Single Column

ITEM INFORMATION

Item#	Base Spread	Max. Table Size	Mount Plate	Powder Coat	Chrome	Premium Color
2212016	16"	20" x 72"	10" x 10"	$213	$234	$219
2212018	18"	24" x 72"	10" x 10"	$213	$234	$219
2212020	20"	28" x 72"	10" x 10"	$214	$235	$220
2212022	22"	30" x 72"	10" x 10"	$214	$235	$220
2212026	26	36" x 72"	10" x 10"	$215	$238	$222
2212030	30"	40" x 72"	10" x 10"	$230	$253	$234
2212032	32"	42" x 72"	12" x 12"	$256	$282	$264
2212036	36"	48" x 72"	12" x 12"	$260	$287	$266

Note: Bases ordered in chrome will come with a black knock-in cap.

221 Concealed Caster End Base

SPECIFICATIONS

Base Height	27¾" (with levelers and without table top)
Column	2” dia. x 14 ga. steel
Cantilever (CT) Option	Column will be 3” offset from the center
Main Bar/Foot	2” dia. 14 ga. steel
Caster	Black plastic 1” wheel – non-locking
Mounting Plate	Stamped 11 ga. steel with welded reinforcement
Assembly Method	Qty 1 ½-13 Threaded Rod Assembly
Shipped	Knocked down (fully assembled optional)

AVAILABLE OPTIONS

- Folding Mechanism (Single Leg) +$108
- Nesting Mechanism +$314 per set
- Genu-Flip Kit +$273
- CT Option +$14
- Edge Mount +$0
- Custom Height (Less than 27¾) +$27
- Custom Height (Greater than 27¾) +$48
- Assembly +$14
- Wire Management Door +$96
- Wire Management Snap-On Cover +$18
- Wire Access Holes +$11

Tubular Series | Concealed Caster

221 Concealed Caster End Base – Double Column

ITEM INFORMATION

Item#	Base Spread	Max. Table Size	Mount Plate	Powder Coat	Chrome	Premium Color
2212026.2	26"	38" x 96"	10" x 10"	$272	$316	$282
2212032.2	32"	42" x 96"	10" x 10"	$286	$333	$299
2212036.2	36"	48" x 96"	10" x 10"	$290	$339	$302
2212042.2	42"	54" x 96"	10" x 10"	$321	$375	$329

Note: Bases ordered in chrome will come with a black knock-in cap.

221 Concealed Caster End Base – Double Column

SPECIFICATIONS

Base Height	27¾" (with levelers and without table top)
Column	2” dia. x 14 ga. steel
Main Bar/Foot	2” dia., 14 ga. steel
Caster	Black plastic 1” wheel – non-locking
Mounting Plate	Stamped 11 ga. steel with welded reinforcement
Assembly Method	Qty 2 ½-13 Threaded Rod Assembly
Shipped	Knocked down (fully assembled optional)

AVAILABLE OPTIONS

- Folding Mechanism (Double Leg) +$239
- Nesting Mechanism $506 per set
- Edge Mount +$0
- Custom Height (Less than 27¾) +$27
- Custom Height (Greater than 27¾) +$48
- Assembly +$14
- Wire Management Door +$96
- Wire Management Snap-On Cover +$18
- Wire Access Holes +$11

Please contact customer service at 507-268-4221 for options to pair with base with levelers.

Tubular Series | Concealed Caster Ratchet Option

221 Concealed Caster Ratchet End Base – Single Column

ITEM INFORMATION

Item#	Base Spread	Max. Table Size	Mount Plate	Powder Coat
RA2212018	18"	24" x 72"	8" x 8"	$348
RA2212022	22"	30" x 72"	8" x 8"	$348
RA2212026	26"	36" x 72"	8" x 8"	$350

Note: Contact Customer Service for double column options.

221 Concealed Caster Ratchet End Base

SPECIFICATIONS

Base Height	Standard Height: 23” with Hidden Wheels: 23” with 2” Casters: 25” with Nester Mechanism: 24” with GenuFlip and GenuFold: 26”
Adjustment Range	**Standard:** 9.45 “ **Ratchet:** 13 positions in .78” increments
Column	**Outer:** 2 ¼” dia., 14 ga. steel **Inner:** 2”, 14. ga steel
Cantilever (CT) Option	Column will be 3” offset from the center
Main Bar/Foot	2” dia., 14 ga. steel
Caster	Black plastic 1” wheel – non-locking
Mounting Plate	Stamped 12 ga. steel with welded reinforcement
Assembly Method	Qty 4 M8 screws to attach mounting plate, qty 1 M12 to attach foot to column
Shipped	Fully Assembled

AVAILABLE OPTIONS

- Folding Mechanism (Single Leg) +$108
- Nesting Mechanism +$314 per set
- Genu-Flip Kit +$273
- CT Option +$14

Find intended use warranty information Online at www.ValleyDesign.biz/Warranty

AS

VALLEY design

PARTNER AT YOUR TABLE

Arch Series

These T & X bases are given a softer, more fluidized look with the subtle bended arch. Its curves pair up nicely with round tops and give a classier look to a classic design!

CURVE APPEAL

SINGLE COLUMN
END BASE

DOUBLE COLUMN
END BASE

SINGLE COLUMN
X-BASES

Find intended use warranty information Online at www.ValleyDesign.biz/Warranty

133 South Highway 52, Fountain, MN 55935 | ValleyDesign.biz | 507.268.4221

Arch Series
401 End Bases – Single Column

ITEM INFORMATION

Item#	Base Spread	Max. Table Size	Mount Plate	Powder Coat	Chrome
4012018	18"	24" x 72"	8" x 8"	$124	$175
4012022	22"	30" x 72"	8" x 8"	$124	$175
4012026	26"	36" x 72"	8" x 8"	$125	$177
4012032	32"	42" x 72"	8" x 8"	$128	$182

401 End Base

SPECIFICATIONS

Base Height	27¾"
Column	2” dia. 14 ga. steel
Main Bars/Feet	1½” dia., 14 ga. steel
Leveler	5/16”-18”, 1” dia., nickel plated steel
Mounting Plate	7 ga. steel, welded to column
Assembly Method	All-Welded
Shipped	Assembled

AVAILABLE OPTIONS

- Locking Casters (2”) +$26, (3”) +$34, (Premium) +$34
- Folding Mechanism (Single Leg) +$108
- Nesting Mechanism +$314 per set
- Genu-Flip Kit +$273
- Edge Mount +$0
- Custom Height (Less than 27¾) +$27
- Custom Height (Greater than 27¾) +$48
- Wire Management Door +$96
- Wire Management Snap-On Cover +$18
- Wire Access Holes +$11 each

Find intended use warranty information Online at www.ValleyDesign.biz/Warranty

Arch Series
401 End Bases – Double Column

ITEM INFORMATION

Item#	Base Spread	Max. Table Size	Mount Plate	Powder Coat	Chrome
4012032.2	32"	42" x 96"	8" x 8"	$212	$304
4012036.2	36"	48" x 96"	8" x 8"	$274	$371

401 End Base - Double Column

SPECIFICATIONS

Base Height	27¾"
Column	2” dia., 14 ga. steel
Main Bars/Feet	1½” dia., 14 ga. steel
Leveler	⅝”-18”, 1” dia., nickel plated steel
Mounting Plate	7 ga. steel, welded to column
Assembly Method	All-Welded
Shipped	Assembled

AVAILABLE OPTIONS

- Locking Casters (2”) +$26, (3”) +$34, (Premium) +$34
- Folding Mechanism +$239
- Nesting Mechanism +$506 per set
- Edge Mount +$0
- Custom Height (Less than 27¾) +$27
- Custom Height (Greater than 27¾) +$48
- Wire Management Door +$96
- Wire Management Snap-On Cover +$18
- Wire Access Holes +$11 each

Arch Series
411 X-Bases – Single Column

ITEM INFORMATION

Item#	Base Spread	Max. Table Size (Round)	Max Table Size (Square)	Mount Plate	Powder Coat	Chrome
4113018	18" x 18"	24"	20" x 20"	10" x 10"	$281	$348
4113022	22" x 22"	30"	26" x 26"	10" x 10"	$285	$355
4113026	26" x 26"	34"	30" x 30"	10" x 10"	$286	$356
4113032	32" x 32"	42"	38" x 38"	12" x 12"	$314	$392

411 X-Base

SPECIFICATIONS

Base Height	27¾"
Column	3” dia., 14 ga. steel
Main Bars/Foot	1½”dia., 14 ga. steel
Leveler	5⁄16”-18”, 1” dia., nickel plated steel
Mounting Plate	Stamped 12 ga. steel w/ welded reinforcement
Assembly Method	Qty. 1, 1/-13” threaded rod assembly
Shipped	Knocked Down

AVAILABLE OPTIONS

- Locking Casters (2”) +$51, (3”) +$68, (Premium) +$68
- Flip Top – Bases 32” or Less +$94
- Detachable Flip Top– Bases 32” or Less +$94
- Genu-Flip – Max 42” Top +$126
- Custom Height (Less than 27¾) +$27
- Custom Height (Greater than 27¾) +$48
- Wire Management Door +$96
- Wire Management Snap-On Cover +$21
- Wire Access Holes +$11 each
- NumaLift Adjustable Column +$266
- Foot Ring +$120

Find intended use warranty information Online at www.ValleyDesign.biz/Warranty

Arch Series
411 X-Bases – Four Column

ITEM INFORMATION

Item#	Base Spread	Max. Table Size (Round)	Max. Table Size (Square)	Mount Plate	Powder Coat
4112036.4	36" x 36"	72"	51" x 51"	5" x 5"	$677

SPECIFICATIONS

Base Height	27¾"
Column	2” dia., 14 ga. steel
Main Bars/Feet	1½” dia., 14 ga. steel
Leveler	5⁄16”-18”, 1” dia., nickel plated steel
Mounting Plate	Qty. 4, ¼” thick plates
Assembly Method	Qty. 4, 5⁄16-18 flat head cap screws.
Shipped	Assembled

***Not available in chrome finish.**

AVAILABLE OPTIONS

- Locking Casters (2”) +$51, (3”) +$68, (Premium) +$68
- Custom Height (Less than 27¾) +$107
- Custom Height (Greater than 27¾) +$193
- Wire Management Door +$96
- Wire Management Snap-On Cover +$21
- Wire Access Holes +$11 each

RS

VALLEY design

Raptor Series

The Raptor bases have a unique, edgy design that will get your tables noticed! Made completely from steel, these bases are cut from our lasers and welded together to give you the reliable strength and durability you've come to expect from us.

LIVING on the EDGE

SINGLE COLUMN
END BASES

SINGLE COLUMN
X-BASES

PARTNER AT YOUR TABLE

Find intended use warranty information Online at www.ValleyDesign.biz/Warranty

133 South Highway 52, Fountain, MN 55935 | ValleyDesign.biz | 507.268.4221

Raptor Series

303 Raptor End Base – Single Column

ITEM INFORMATION

Item#	Base Spread	Max. Table Size	Mount Plate	Powder Coat
3032018	18"	24" x 72"	8" x 8"	$199
3032022	22"	30" x 72"	8" x 8"	$214
3032026	26"	36" x 84"	8" x 8"	$226
3032032	32"	42" x 84"	8" x 8"	$245
3032036	36"	48" x 84"	8" x 8"	$257

303 Raptor End Base

SPECIFICATIONS

Base Height	27¾"
Column	2" dia.,14 ga. steel
Cantilever (CT) Option	Column will be 3" offset from center
Main Bar/Foot	¼" steel verticals, 11 ga. steel cover
Levelers	1½" dia., black plated plastic
Mounting Plate	Stamped 7 ga. steel with welded reinforcement, welded to column
Assembly Method	¼" welded to column
Shipped	Fully welded

AVAILABLE OPTIONS

- Locking Casters (2") +$26 (3") +$34 (Premium) +$34
- Folding Mechanism +$108
- Nesting Mechanism +$314 per set
- CT Option +$87
- Wire Management Door +$96
- Wire Management Snap-On Cover +$18
- Wire Access Hole +$11 each
- Custom Height (less than 27¾") +$27
- Custom Height (greater than 27¾") +$48

Raptor Series

313 Raptor X-Base – Single Column

ITEM INFORMATION

Item#	Base Spread	Max. Table Size (Round)	Max. Table Size (Square)	Mount Plate	Powder Coat
3133018	18" x 18"	24"	20" x 20"	10" x 10"	$346
3133022	22" x 22"	30"	26" x 26"	10" x 10"	$355
3133026	26" x 26"	34"	30" x 30"	10" x 10"	$378
3133032	32" x 32"	42"	38" x 38"	12" x 12"	$397
3133036	36" x 36"	48"	42" x 42"	12" x 12"	$408

313 Raptor X-Base

SPECIFICATIONS

Base Height	27¾"
Column	3" dia., 14 ga. steel
Main Bar/Feet	¼" steel verticals, 11 ga. steel cover
Levelers	1½" dia., black plated plastic
Mounting Plate	7 or 11 ga. steel with welded reinforcement
Assembly Method	½-13 flange bolt 1.5"
Shipped	Fully Assembled

AVAILABLE OPTIONS

- Locking Casters (2") +$51 (3") +$68 (Premium) +$68
- Flip Top Mechanism (32" or less) +$94
- Detachable Flip Top +$94
- Numa-Lift (42" dia. or less) +$266
- Wire Management Door +$96
- Wire Management Snap-On Cover +$21
- Wire Access Hole +$11 each
- Custom Height (less than 27¾") +$27
- Custom Height (greater than 27¾") +$48

LS

PARTNER AT YOUR TABLE

VALLEY design

Laser Series

The 304 and 314 are designed with a low sleek profile in mind. They can be ordered with round ends or squared off design. The main bars are made of 1/2" thick steel, making them incredibly stable, eliminating the spring effect

LOW, SLEEK PROFILE

SINGLE COLUMN END BASE

DOUBLE COLUMN END BASE

SINGLE COLUMN X-BASES

Find intended use warranty information Online at www.ValleyDesign.biz/Warranty

133 South Highway 52, Fountain, MN 55935 | ValleyDesign.biz | 507.268.4221

Laser Series
304 Single Column End Bases

ITEM INFORMATION

Item#	Base Spread	Max. Table Size	Mount Plate	Powder Coat	Chrome	Premium Color
3042018	18"	24" x 72"	10" x 10"	$208	$253	$214
3042022	22"	30" x 72"	10" x 10"	$215	$273	$224
3042026	26"	36" x 84"	10" x 10"	$219	$281	$226
3042032	32"	42" x 84"	12" x 12"	$228	$297	$234
3042036	36"	48" x 84"	12" x 12"	$242	$318	$247

304 End Base

SPECIFICATIONS

Base Height	27¾"
Column	2” dia., 14 ga. steel
Cantilever (CT) Option	Column will be 3” offset from center
Main Bars/Feet	½” thick x 2” wide steel
Leveler	1” dia., nickel plated
Mounting Plate	Stamped 7 ga. steel with welded reinforcement
Assembly Method	Qty. 2, ½-13 bolts top and bottom and ¼-20 anti rotation screw
Shipped	Knocked Down

AVAILABLE OPTIONS

- Locking Casters (2”) +$26, (3”) +$34, (Premium) +$34
- Folding Mechanism (Single Leg) +$108
- Nesting Mechanism +$314 per set
- Genu-Flip Kit +$273
- CT Option +$14
- Custom Height (Less than 27¾) +$27
- Custom Height (Greater than 27¾) +$48
- Assembly +$14
- Wire Management Door +$96
- Wire Management Snap-On Cover +$18
- Wire Access Holes +$11 each

Laser Series
304 Double Column End Bases

ITEM INFORMATION

Item #	Base Spread	Max. Table Size	Mount Plate	Powder Coat	Chrome	Premium Color
3042026.2	26"	38" x 96"	10" x 10"	$343	$421	$348
3042036.2	36"	48" x 96"	10" x 10"	$347	$439	$353
3042042.2	42"	54" x 96"	10" x 10"	$357	$461	$364

304 Double Column End Base

SPECIFICATIONS

Base Height	27¾"
Column	2" dia., 14 ga. steel
Main Bars/Feet	½" thick x 2" wide steel
Leveler	1" dia., nickel plated
Mounting Plate	Stamped 7 ga. steel with welded reinforcement
Assembly Method	Qty. 4, ½-13 bolts top and bottom and ¼-20 anti rotation screw
Shipped	Knocked Down

AVAILABLE OPTIONS

- Locking Casters (2") +$26, (3") +$34, (Premium) +$34
- Folding Mechanism (Single Leg) +$239
- Nesting Mechanism +$506 per set
- Custom Height (Less than 27¾) +$27
- Custom Height (Greater than 27¾) +$48
- Assembly +$14
- Wire Management Door +$96
- Wire Management Snap-On Cover +$18
- Wire Access Holes +$11 each

Laser Series
314 Single Column X-Base

ITEM INFORMATION

Item #	Base Spread	Max Table Size (Round)	Max Table Size (Square)	Mounting Plate	Powder Coat	Chrome	Premium Color
3143018	18" x 18"	24"	20" x 20"	10” x 10”	$334	$386	$347
3143022	22" x 22"	30"	26" x 26"	10” x 10”	$348	$406	$362
3143026	26" x 26"	34"	30" x 30"	10” x 10”	$354	$413	$387
314302226	22" x 26"	N/A	26" x 32"	10” x 10”	$354	$413	$387
3143032	32" x 32"	42"	38" x 38"	12” x 12”	$389	$454	$401
314302632	26" x 32"	N/A	30" x 38"	12” x 12”	$389	$454	$401
3143036	36" x 36"	48"	42" x 42"	12” x 12”	$408	$472	$419

314 Single Column X-Base

SPECIFICATIONS

Base Height	27¾"
Column	3” dia., 14 ga. steel
Main Bars/Feet	½” thick x 2” wide steel
Leveler	5⁄16”-18”, 1” dia., nickel plated
Mounting Plate	12 ga. steel with welded reinforcement
Assembly Method	Qty 2, ½-13 bolts top and bottom and ¼-20 anti rotation screw
Shipped	Knocked down

AVAILABLE OPTIONS

- Locking Casters (2”) +$51 (3”) +$68 (Premium) +$68
- Flip Top (32” or less) +$94
- Detachable Flip Top +94
- Genu-Flip Mechanism (max. 42” top) +$126
- Custom Height (Less than 27¾) +$27
- Custom Height (Greater than 27¾) +$48
- Wire Management Door +$96
- Wire Management Snap-On Cover +$21
- Wire Access Holes +$11 each
- Foot Ring +$120
- Numa-Lift +$266

Laser Series
306 Single Column End Bases

ITEM INFORMATION

Item#	Base Spread	Max. Table Size	Mount Plate	Powder Coat	Chrome	Premium Color
3062018	18"	24" x 72"	10" x 10"	$208	$253	$214
3062022	22"	30" x 72"	10" x 10"	$215	$273	$224
3062026	26"	36" x 84"	10" x 10"	$219	$281	$226
3062032	32"	42" x 84"	12" x 12"	$228	$297	$234
3062036	36"	48" x 84"	12" x 12"	$242	$318	$247

306 End Base

SPECIFICATIONS

Base Height	27¾"
Column	2” dia., 14 ga. steel
Cantilever (CT) Option	Column will be 3” offset from center.
Main Bars/Feet	½” thick x 2” wide steel
Leveler	1” dia., nickel plated
Mounting Plate	Stamped 7 ga. steel with welded reinforcement
Assembly Method	Qty. 2, ½-13 bolts top and bottom and ¼-20 anti rotation screw
Shipped	Knocked Down

AVAILABLE OPTIONS

- Locking Casters (2”) +$26, (3”) +$34, (Premium) +$34
- Folding Mechanism +$108
- Nesting Mechanism +$314 per set
- Genu-Flip Kit +$273
- CT Option +$14
- Custom Height (Less than 27¾) +$27
- Custom Height (Greater than 27¾) +$48
- Assembly +$14
- Wire Management Door +$96
- Wire Management Snap-On Cover +$18
- Wire Access Holes +$11 each

Laser Series
306 Double Column End Bases

ITEM INFORMATION

Item #	Base Spread	Max. Table Size	Mount Plate	Powder Coat	Chrome	Premium Color
3062026.2	26"	38" x 96"	10" x 10"	$343	$421	$348
3062036.2	36"	48" x 96"	10" x 10"	$347	$439	$353
3062042.2	42"	54" x 96"	10" x 10"	$357	$461	$364

306 Double Column End Base

SPECIFICATIONS

Base Height	27¾"
Column	2" dia., 14 ga. steel
Main Bars/Feet	½" thick x 2" wide steel
Leveler	1" dia., nickel plated
Mounting Plate	Stamped 7 ga. steel with welded reinforcement
Assembly Method	Qty. 4, ½-13 bolts top and bottom and ¼-20 anti rotation screw
Shipped	Knocked Down

AVAILABLE OPTIONS

- Locking Casters (2") +$26, (3") +$34, (Premium) +$34
- Folding Mechanism +$239
- Nesting Mechanism +$506 per set
- Custom Height (Less than 27¾) +$27
- Custom Height (Greater than 27¾) +$48
- Assembly +$14
- Wire Management Door +$96
- Wire Management Snap-On Cover +$18
- Wire Access Holes +$11 each

Find intended use warranty information Online at www.ValleyDesign.biz/Warranty

Laser Series
316 Single Column X-Base

ITEM INFORMATION

Item #	Base Spread	Max Table Size (Round)	Max Table Size (Square)	Mounting Plate	Powder Coat	Chrome	Premium Color
3163018	18" x 18"	24"	20" x 20"	10” x 10”	$334	$386	$347
3163022	22" x 22"	30"	26" x 26"	10” x 10”	$348	$406	$362
3163026	26" x 26"	34"	30" x 30"	10” x 10”	$354	$413	$387
31630226	22" x 26"	N/A	26" x 32"	10” x 10”	$354	$413	$387
3163032	32" x 32"	42"	38" x 38"	12” x 12”	$389	$454	$401
316302632	26" x 32"	N/A	30" x 38"	12” x 12”	$389	$454	$401
3163036	36" x 36"	48"	42" x 42"	12” x 12”	$408	$472	$419

316 Single Column X-Base

SPECIFICATIONS

Base Height	27¾"
Column	3” dia., 14 ga. steel
Main Bars/Feet	½” thick x 2” wide steel
Leveler	⅝”-18”, 1” dia., nickel plated
Mounting Plate	12 ga. steel with welded reinforcement
Assembly Method	Qty 2, ½-13 bolts top and bottom and ¼-20 anti rotation screw
Shipped	Knocked down

AVAILABLE OPTIONS

- Locking Casters (2”) +$51 (3”) +$68 (Premium) +$68
- Flip Top (32” or less) +$94
- Detachable Flip Top +$94
- Genu-Flip Mechanism (max. 42” top) +$126
- Custom Height (Less than 27¾) +$27
- Custom Height (Greater than 27¾) +$48
- Wire Management Door +$96
- Wire Management Snap-On Cover +$21
- Wire Access Holes +$11 each
- Foot Ring +$120
- Numa-Lift +$266

FS

VALLEY design

Frame Series

Valley Design redefines support with the Frame Series. The modern looking frames provide a timeless aesthetic that packs a lot of strength. If you're looking for added support without added racking, the Frame Series is the solution for you! It is the perfect pair for a larger table tops.

CLASSIC, SUPPORTIVE POWER HOUSE

H Frame

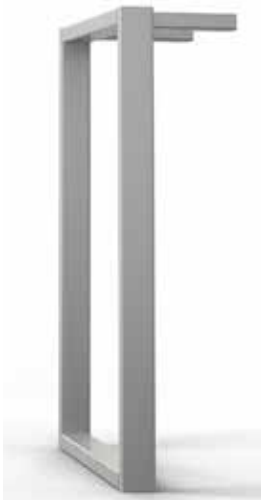

O Frame

PARTNER AT YOUR TABLE

Find intended use warranty information Online at www.ValleyDesign.biz/Warranty

133 South Highway 52, Fountain, MN 55935 | ValleyDesign.biz | 507.268.4221

Frame Series
H Frame End Base

ITEM INFORMATION

Item#	Column Diameter	Mount Plate	Max. Table Size	Column on Center	Powder Coat	Chrome
1082018	2"	5" x 22"	36" x 96"	18"	$131	$242
1082022	2"	5" x 26"	44" x 96"	22"	$131	$242
1083022	3"	5" x 26"	44" x 96"	22"	$181	$303
1084022	4"	5" x 26"	44" x 96"	22"	$233	$351
1082034	2"	5" x 38"	60" x 96"	34"	$166	$285
1083034	3"	5" x 38"	60" x 96"	34"	$213	$347
1084034	4"	5" x 38"	60" x 96"	34"	$266	$395

SPECIFICATIONS

Base Height	27¾" (with levelers and without table top)
Column	2", 3", 4" dia., 14 ga. steel
Leveler	5/16"-18, 1¾" dia., black plastic
Mounting Plate	¼" thick
H-Base Stretchers	1" dia., 16 ga. steel
Shipped	Fully assembled

AVAILABLE OPTIONS

- Custom Height (Less than 27¾)
  2" - 4" diameter +$50
- Custom Height (Greater than 27¾)
  2" - 3" diameter +$88
  2" - 3" diameter +$116

Frame Series
O Frame End Base

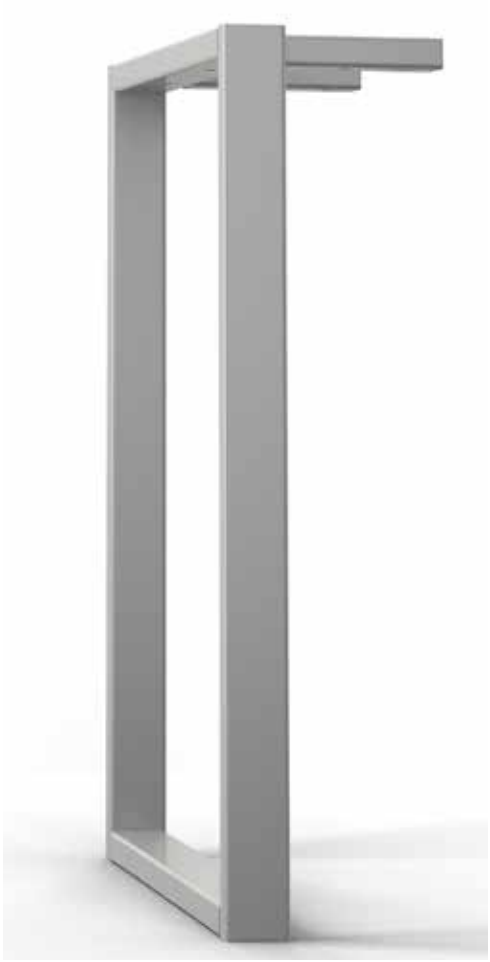

ITEM INFORMATION

Item#	Mount Plate	Max. Table Size	Powder Coat
1071X218	1" x 2" x 6" Tabs	20" x 84"	$177
1071X222	1" x 2" x 6" Tabs	24" x 84"	$183
1071X228	1" x 2" x 6" Tabs	30" x 84"	$190
1071X234	1" x 2" x 6" Tabs	36" x 84"	$198
1071X240	1" x 2" x 6" Tabs	42" x 90"	$205
1071X246	1" x 2" x 6" Tabs	48" x 90"	$213

SPECIFICATIONS

Base Height	27¾" (with levelers and without table top)
Column	1" x 2" end base, 14 ga. steel tubing tabs
Leveler	5/16"-18, 1¾" dia., black plastic
Mounting Plate	14 ga. tubing tabs
Shipped	Fully assembled

AVAILABLE OPTIONS

- Custom Height
  (Less than or Greater than 27¾) +$96

***Note: Minimum order levels of 20 will be required on all custom height sizes**

DS

VALLEY design

Disk Series

When you want to put your table on a pedestal we have just the base to do it! The disk base is a contemporary circular steel disk with a column to support up to 48" diameter round tables, or larger using double weights. The Diskette™ series is the perfect solution for a fixed table application at bar height, tall dining, or standard table height. We've developed a strong, easy and attractive floor mount fix as an added feature to this item.

SIMPLE, STRONG and ATTRACTIVE

TRUMPET BASE

PEDESTAL BASE

HEAVY WEIGHT BASE

ROUND VERSA BASE

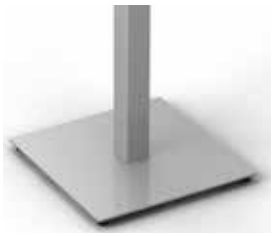

SQUARE VERSA BASE

DISKETTE

SQUIRCLE BASE

PARTNER AT YOUR TABLE

Find intended use warranty information Online at www.ValleyDesign.biz/Warranty

133 South Highway 52, Fountain, MN 55935 | ValleyDesign.biz | 507.268.4221

Disk Series
118 Trumpet Disk

ITEM INFORMATION

Item#	Base Spread	Max. Table Size (Round)	Max. Table Size (Square)	Mount Plate	Powder Coat	Chrome
1183022	22"	36"	30" x 30"	12" x 12"	$322	$564
1183026	26"	42"	36" x 36"	12" x 12"	$348	$613

Shown is 1183026P

(Power Box Option)

SPECIFICATIONS

Base Height	27¾" (with levelers and without table top)
Column	3" diameter x 14 ga. round steel tube
Disk Base	14 ga. spun steel
Leveler	Five (5) ⅝"-18, 1" dia., nickel
Mounting Plate	7 ga. thick plate
Assembly Method	Set of two (2) ⅝ bolts to plate, 1 (one) ½-13 bolt base to column
Shipped	All components included for one table with one base Not assembled

AVAILABLE OPTIONS

- Foot Ring +$120
- Custom Height (Less than 27¾) +$27
- Custom Height (Greater than 27¾) +$48
- Wire Management Snap-On Cover +$21
- Wire Management Holes +$11 ea.
- Wire Management Access Door +$96
- Power Box Option +$47
- Flip Top Mech +$94
- Genu-Flip +$126

Disk Series
117 Pedestal Disk

ITEM INFORMATION

Item#	Base Spread	Max. Table Size (Round)	Max. Table Size (Square)	Mount Plate	Powder Coat	Chrome	Premium Color
1173020	20"	36"	30" x 30"	10" x 10"	$387	$696	$401
1174024	24"	42"	36" x 36"	12" x 12"	$416	$725	$432
1174032	32"	48"	42" x 42"	12" x 12"	$508	$842	$529

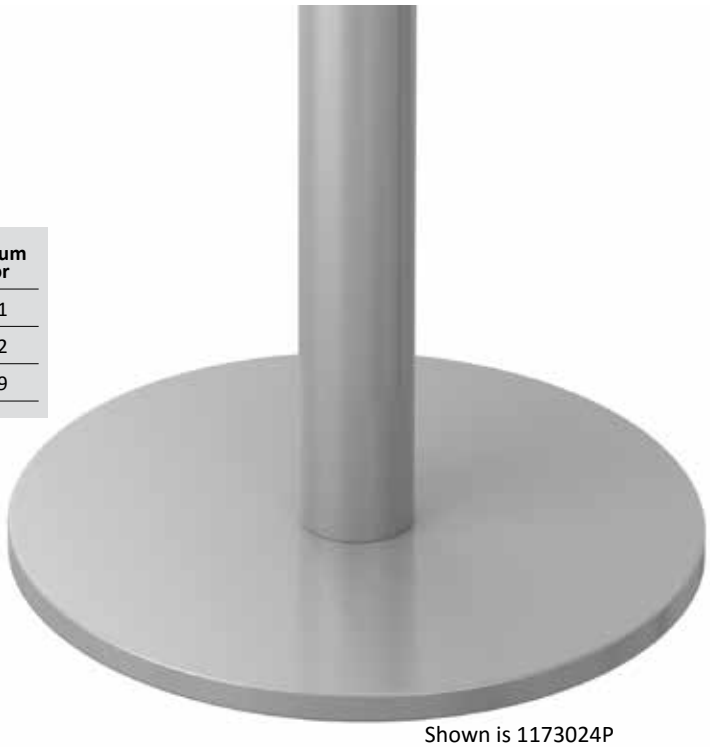

Shown is 1173024P

(Power Box Option)

SPECIFICATIONS

Base Height	27¾" (with levelers and without table top)
Column	20": 3" dia. x 14 ga. round steel tube 24" and 32": 4" dia., 14 ga. steel
Disk Base	14 ga. spun steel cover adhered to ¼" thick steel plate
Leveler	Five (5) 5/16"-18, 1" dia., nickel
Mounting Plate	20": 7 ga. thick plate 24" and 32": 7 ga. thick plate
Assembly Method	Set of two (2) 5/16" bolts both at the top and the bottom of each column
Shipped	All components included for one table with one base Not assembled

AVAILABLE OPTIONS

- Foot Ring +$120
- Custom Height (Less than 27¾) +$27
- Custom Height (Greater than 27¾) +$48
- Wire Management Holes +$11 ea.
- Wire Management Access Door +$96
- Wire Thru Access from Plate to Floor +$44
- Genu-Flip (3" column only) +$126
- Snap-On Cover (3" column only) +$21
- Power Box Option +$48

Disk Series
117 Heavy Weight Disk

ITEM INFORMATION

Item#	Base Spread	Max. Table Size (Round)	Max. Table Size (Square)	Mount Plate	Powder Coat	Chrome
1176024P-DP16	24"	54"	45" x 45"	16" x 16"	$574	$835
1176032P-DP16	32"	60"	48" x 48"	16" x 16"	$870	$1,166

SPECIFICATIONS

Base Height	27¾" (with levelers and without table top)
Column	6" dia., 14 ga. steel
Disk Base	14 ga. spun steel cover adhered to two (2) ¼" thick steel disks
Leveler	Five (5) ⅝"-18, 1" dia., nickel
Mounting Plate	7 ga. thick plate
Assembly Method	Set of two (4) ⅝" bolts both at the top and bottom of each column.
Shipped	All components included for one table with one base Not assembled

AVAILABLE OPTIONS

- Custom Height (Less than 27¾) +$27
- Custom Height (Greater than 27¾) +$101
- Wire Management Holes +$11 ea.
- Wire Thru Access from Plate to Floor +$44

Disk Series
117 Versa Disk – Square (No Cover)

ITEM INFORMATION

Item#	Base Spread	Max. Table Size (Round)	Max. Table Size (Square)	Mount Plate	Powder Coat
1173X316P-SQNC	16" x 16"	36"	30" x 30"	10" x 10"	$303
1173X320P-SQNC	20" x 20"	42"	36" x 36"	12" x 12"	$324
1173X326P-SQNC	26" x 26"	48"	42" x 42"	12" x 12"	$395

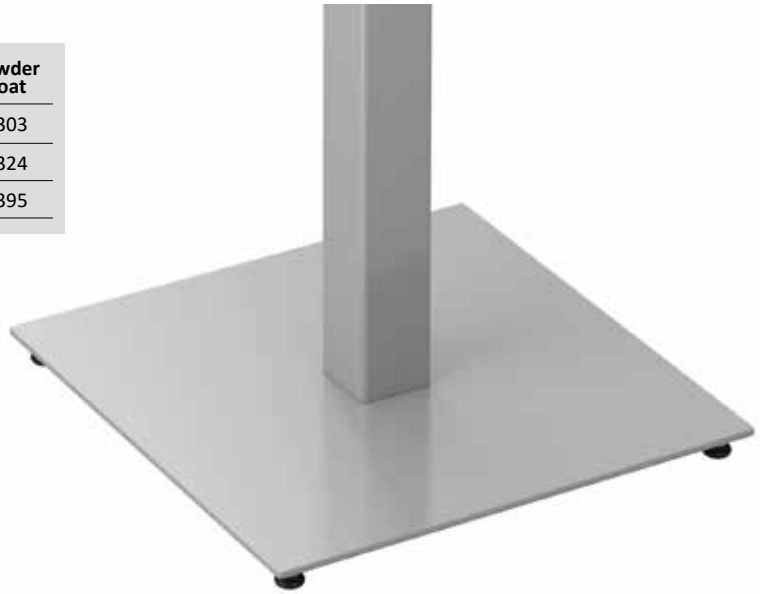

SPECIFICATIONS

Base Height	27¾" (with levelers and without table top)
Column	3” x 3” square tube, 14 ga. steel
Disk Base	¼” thick steel disk (no cover)
Leveler	Four (4) ⅝”-18, 1” dia., nickel
Mounting Plate	16”: 7 ga. thick plate 20” and 26”: 7 ga. thick plate
Assembly Method	Set of two (2) ⅝” bolts both at the top and the bottom of each column
Shipped	All components included for one table with one base Not assembled

AVAILABLE OPTIONS

- Custom Height (Less than 27¾) +$27
- Custom Height (Greater than 27¾) +$48
- Wire Management Holes +$11

Disk Series
117 Versa Disk – Round (No Cover)

ITEM INFORMATION

Item#	Base Spread	Max. Table Size (Round)	Max. Table Size (Square)	Mount Plate	Powder Coat
1173020P-NC	20"	36"	30" x 30"	10" x 10"	$303
1174024P-NC	24"	42"	36" x 36"	12" x 12"	$324
1174032P-NC	32"	48"	42" x 42"	12" x 12"	$395

(Power Box Option)

SPECIFICATIONS

Base Height	27¾" (with levelers and without table top)
Column	20": 3" dia., 14 ga. steel 24" and 32": 4" dia. 14 ga. steel
Disk Base	¼" thick steel disk (no cover)
Leveler	Five (5) 5/16"-18, 1" dia., nickel
Mounting Plate	20": 7 ga. thick plate 24" and 32": 7 ga. thick plate
Assembly Method	Set of two (2) 5/16" bolts both at the top and bottom of each column
Shipped	All components included for one table with one base Not assembled

AVAILABLE OPTIONS

- Foot Ring +$120
- Custom Height (Less than 27¾) +$27
- Custom Height (Greater than 27¾) +$48
- Wire Management Snap On Cover (3" Col Only) +$21
- Wire Management Holes +$11 ea.
- Wire Thru Access from Plate to Floor +$44
- Power Box Option +$48
- Genu-Flip (3" column only) +$126

Disk Series
Squircle Base

ITEM INFORMATION

Item#	Foot Span	Mount Plate	Max. Table Size (Round)	Max. Table Size (Round)	Powder Coat
1173016PBOW	16" x 16"	10" x 10"	36"	30" x 30 "	$303
1174020PBOW	20" x 20"	12" x 12"	42"	36" x 36"	$324
1174026PBOW	26" x 26"	12" x 12"	48"	42" x 42"	$395

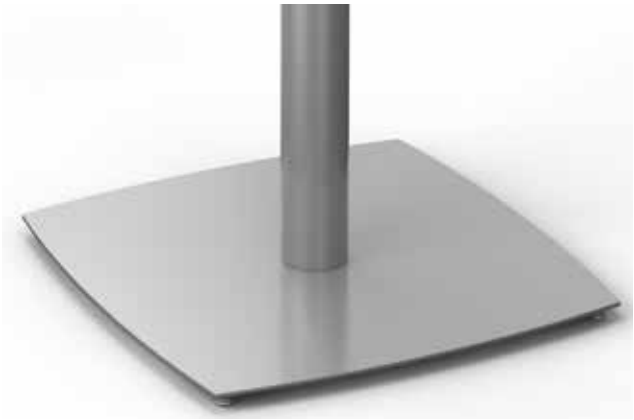

(Power Box Option)

SPECIFICATIONS

Base Height Adjustment Range	27 ¾" (with levelers and without table top)
Column	16" Base: 3" dia., 14 ga. steel
Column	20" and 26" Base: 4" dia., 14 ga. steel
Disk	¼" thick steel plate
Leveler	Five (5) 5/16" - 18, five 1" dia., nickel
Mounting Plate	7 ga. thick steel plate
Assembly Method	Set of two (2) 5/16" bolts both at the top and bottom of each column
Shipped	All components included for one table with one base Not assembled

AVAILABLE OPTIONS

- Foot Ring +$120
- Custom Height (Less than 27¾) +$27
- Custom Height (Greater than 27¾) +$48
- Wire Management 3" Snap-On Cover +$21
- Wire Management Holes +$11 ea.
- Wire Management Thru Hole +$44 ea.
- Wire Management Access Door +$96
- Power Box +$48
- Genu-Flip (3" column only) +$126

Caution should be taken at all times when assembling adjustable height products.
There are warning labels and tags on items that require close attention. Please follow all assembly instructions and warnings when unpacking and assembling adjustable height productions. Miss-use or improper handling of product will result in voiding of Valley Design warranty and possible injury to assembler/end-user. Valley Design does not hold responsibility for any damage to product due to miss-use, lack of attention to instructions.

Find intended use warranty information Online at www.ValleyDesign.biz/Warranty

Disk Series
117 Diskette™ Base

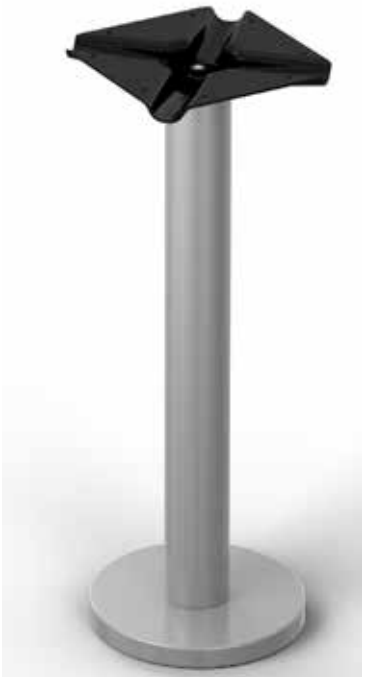

ITEM INFORMATION

Item#	Base Diameter	Mount Plate	Powder Coat	Chrome	Premium Color
1173010	10"	10" x 10"	$182	$290	$200

Floor Mounted Diskette Assembly (Optional)

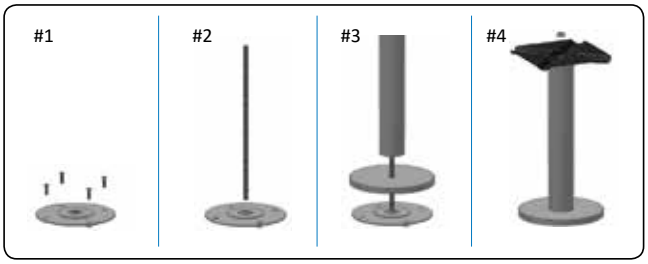

(Floor mounting fasteners are not provided. It is the installer's responsibility to ensure the appropriate fastener is used for the type of floor: Lag bolts for a wood floor; expansion anchors for a concrete floor.)

SPECIFICATIONS

Base Height	27¾" (with levelers and without table top)
Column	3" dia. x 14 ga. steel tube
Disk Base	14 ga. spun steel cover with ¼" thick steel disk
Leveler, Freestanding Leveler, Floor Mount	5/16"-18, single 2½" dia. black No levelers
Mounting Plate, Freestanding Mounting Plate, Floor Mount	7 ga. thick plate 11 ga. stamped steel with welded reinforcement on floor mounted base
Assembly Method, Free Standing Assembly Method, Floor Mount	Set of four (4) 5/16" bolts both at the top and bottom of each column ½-13" T-Rod
Shipped	All components included for one table with one base Not assembled

AVAILABLE OPTIONS

- Custom Height (Less than 27¾) +$27
- Custom Height (Greater than 27¾) +$48
- Wire Management Snap On Cover +$21
- Floor Mount Option +$51

Disk Series
Adjustable Height Round Column

ITEM INFORMATION

Item#	Foot Span	Mount Plate	Max. Table Size	Price
LG1R7011720	20" Round	8" x 8"	36" D, 30" x 30"	$709
LS1R7011720	20" Round	8" x 8"	36" D, 30" x 30"	$709
NU1173020	20" Round	12" x 12" (7 ga)	36" D, 30" x 30"	$652
LR1R4.011724	24" Round	12" x 12"	42" D, 36" x 36"	$899
LS1R4.011724	24" Round	12" x 12"	42" D, 36" x 36"	$899
LR1R4.011732	32" Round	12" x 12"	48" D, 42" x 42"	$987
LS1R4.011732	32" Round	12" x 12"	48" D, 42" x 42"	$987

AVAILABLE LIFT CAPACITY

Specify	Pound Equivalent	Lift Range
150N	33 lbs.	28-38 lbs.
200N	44 lbs.	34-54 lbs.
250N	55 lbs.	45-65 lbs.
300N	66 lbs.	56-76 lbs.

Please contact Customer Service for assistance before placing your orders.
The pneumatic and electric height adjustable options require a higher level of product understanding, installation and product knowledge.

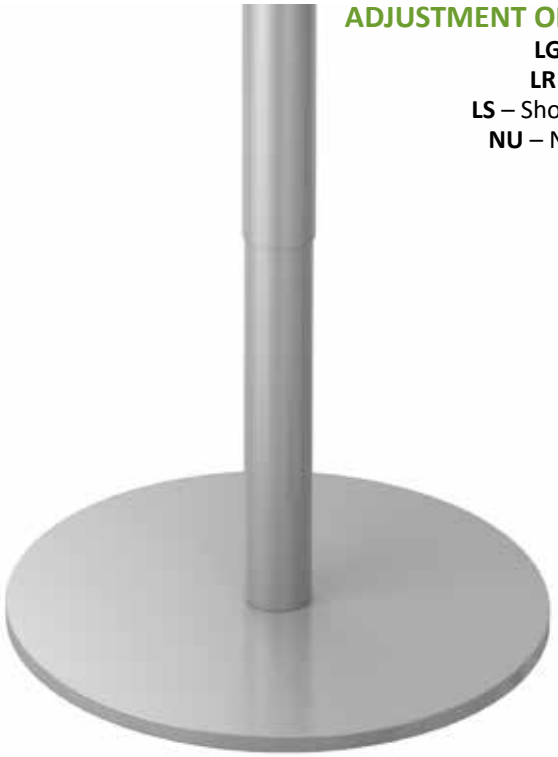

ADJUSTMENT OPTIONS

LG – Glides
LR – Rollers
LS – Short Stroke
NU – Numa Lift

SPECIFICATIONS

Base Height Adjustment Range	**LG:** 26 ¾" to 44 ½" (with levelers and without table top) **LR:** 26 ¾" to 44 ½" (with levelers and without table top) **LS:** 18 ¼" - 28 ¼" (with levelers and without table top) **NU:** 23" - 35" (with levelers and without table top)
Column (Lower, Outer)	**LG, LS, NU:** 2.76" (70 mm) dia. x 0.079" (2mm) round steel tube **LR4.0, LS4.0:** 4 ¼" dia.
Column (Upper, Inner)	**LG, LS, NU:** 2.48" (70 mm) dia. x 0.079" (2mm) round steel tube **LR4.0, LS4.0:** 4.0" dia.
Disk	14 ga. spun steel adhered to ¼" thick steel plate
Leveler	Five (5) 5/16" - 18, 1" dia., nickel
Mounting Plate	8" x 8" and 12" x 12": ¼" thick steel plate 12" x 12" (7 ga.) : 7 ga. thick steel plate
Assembly Method	Set of four (4) 8mm bolts both at the top and bottom of each column
Shipped	All components included for one table Not assembled

AVAILABLE OPTIONS

- Genu-Flip +$126

Caution should be taken at all times when assembling adjustable height products.
There are warning labels and tags on items that require close attention. Please follow all assembly instructions and warnings when unpacking and assembling adjustable height productions. Miss-use or improper handling of product will result in voiding of Valley Design warranty and possible injury to assembler/end-user. Valley Design does not hold responsibility for any damage to product due to miss-use, lack of attention to instructions.

Find intended use warranty information Online at www.ValleyDesign.biz/Warranty

Disk Series
Adjustable Height No Cover Disk

ITEM INFORMATION

Item#	Foot Span	Mount Plate	Max. Table Size	Price
LG1R7011720-NC	20" Round	8" x 8"	36" D, 30" x 30"	$626
LS1R7011720-NC	20" Round	8" x 8"	36" D, 30" x 30"	$626
NU1173020-NC	20" Round	12" x 12" (7 ga)	36" D, 30" x 30"	$567
LR1R4.011724-NC	24" Round	12" x 12"	42" D, 36" x 36"	$813
LS1R4.011724-NC	24" Round	12" x 12"	42" D, 36" x 36"	$813
LR1R4.011732-NC	32" Round	12" x 12"	48" D, 42" x 42"	$880
LS1R4.011732-NC	32" Round	12" x 12"	48" D, 42" x 42"	$880

AVAILABLE LIFT CAPACITY

Specify	Pound Equivalent	Lift Range
150N	33 lbs.	28-38 lbs.
200N	44 lbs.	34-54 lbs.
250N	55 lbs.	45-65 lbs.
300N	66 lbs.	56-76 lbs.

Please contact Customer Service for assistance before placing your orders.
The pneumatic and electric height adjustable options require a higher level of product understanding, installation and product knowledge.

ADJUSTMENT OPTIONS
LG – Glides
LR – Rollers
LS – Short Stroke
NU – Numa Lift

SPECIFICATIONS

Base Height Adjustment Range	**LG:** 26 ¾" to 44 ½" (with levelers and without table top) **LR:** 26 ¾" to 44 ½" (with levelers and without table top) **LS:** 18 ¼" - 28 ¼" (with levelers and without table top) **NU:** 23" - 35" (with levelers and without table top)
Column (Lower, Outer)	**LG, LS, NU:** 2.76" (70 mm) dia. x 0.079" (2mm) round steel tube **LR4.0, LS4.0:** 4.25" dia.
Column (Upper, Inner)	**LG, LS, NU:** 2.48" (70 mm) dia. x 0.079" (2mm) round steel tube **LR4.0, LS4.0:** 4.0" dia.
Disk	14 ga. spun steel adhered to ¼" thick steel plate
Leveler	Five (5) 5/16" - 18, 1" dia., nickel
Mounting Plate	8" x 8" and 12" x 12": ¼" thick steel plate 12" x 12" (7 ga.) : 7 ga. thick steel plate
Assembly Method	Set of four (4) 8mm bolts both at the top and bottom of each column
Shipped	All components included for one table Not assembled

AVAILABLE OPTIONS

- Genu-Flip +$118

Caution should be taken at all times when assembling adjustable height products.
There are warning labels and tags on items that require close attention. Please follow all assembly instructions and warnings when unpacking and assembling adjustable height productions. Miss-use or improper handling of product will result in voiding of Valley Design warranty and possible injury to assembler/end-user. Valley Design does not hold responsibility for any damage to product due to miss-use, lack of attention to instructions.

Find intended use warranty information Online at www.ValleyDesign.biz/Warranty

Disk Series

Adjustable Height Square Column No Cover Square Disk

ITEM INFORMATION

Item#	Foot Span	Mount Plate	Max. Table Size	Price
LR70QD16-SQNC	16" Square	12" x 12"	36" D, 30" x 30"	$658
LR70QD20-SQNC	20" Square	12" x 12"	42" D, 36" x 36"	$679
LR70QD26SQNC	26" Square	12" x 12"	48" D, 42" x 42"	$746

AVAILABLE LIFT CAPACITY

Specify	Pound Equivalent	Lift Range
150N	33 lbs.	28-38 lbs.
200N	44 lbs.	34-54 lbs.
250N	55 lbs.	45-65 lbs.
300N	66 lbs.	56-76 lbs.

Please contact Customer Service for assistance before placing your orders.
The pneumatic and electric height adjustable options require a higher level of product understanding, installation and product knowledge.

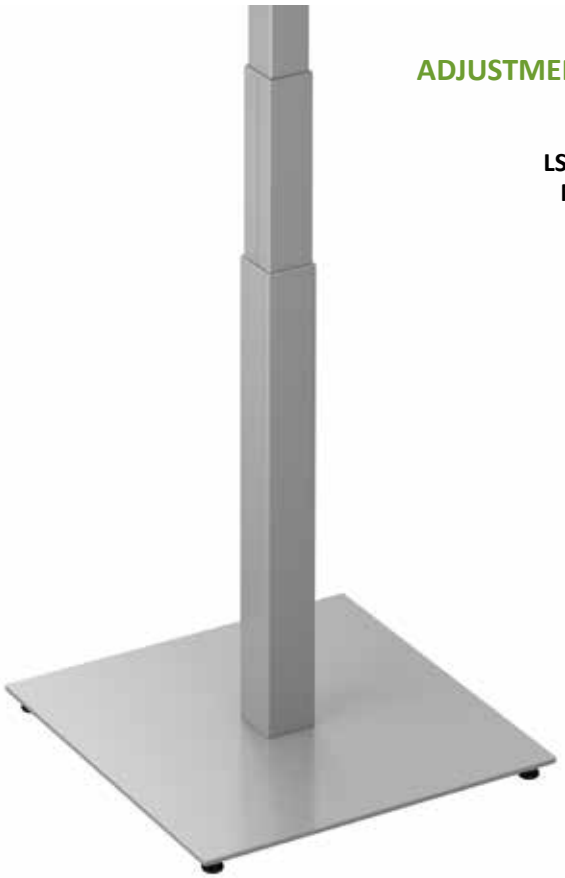

ADJUSTMENT OPTIONS

LG – Glides
LR – Rollers
LS – Short Stroke
NU – Numa Lift

SPECIFICATIONS

Base Height Adjustment Range	26¾" - 44½" (with levelers and without table top)
Column (Lower, Outer)	70 x 70 mm square
Column (Upper, Inner)	63 x 63 x 2 mm square
Disk	¼" thick steel plate
Leveler	Five (5) ⅝" - 18, 1" dia., nickel
Mounting Plate	¼" thick steel plate
Assembly Method	Set of four (4) 8mm bolts both at the top and bottom of each column
Shipped	All components included for one table Not assembled

Caution should be taken at all times when assembling adjustable height products.
There are warning labels and tags on items that require close attention. Please follow all assembly instructions and warnings when unpacking and assembling adjustable height productions. Miss-use or improper handling of product will result in voiding of Valley Design warranty and possible injury to assembler/end-user. Valley Design does not hold responsibility for any damage to product due to miss-use, lack of attention to instructions.

Find intended use warranty information Online at www.ValleyDesign.biz/Warranty

Disk Series
Adjustable Height Round Trumpet Disk

ITEM INFORMATION

Item#	Foot Span	Mount Plate	Max. Table Size	Price
LG1R7011822	22" Round	8" x 8"	36" D, 30" x 30"	$821
LS1R7011822	22" Round	8" x 8"	36" D, 30" x 30"	$821
NU1183022	22" Round	12" x 12" (7 ga)	36" D, 30" x 30"	$563
LG1R7011826	26" Round	12" x 12"	42" D, 36" x 36"	$1,055
LS1R7011826	26" Round	12" x 12"	42" D, 36" x 36"	$1,055

AVAILABLE LIFT CAPACITY

Specify	Pound Equivalent	Lift Range
100N	22 lbs.	18-28 lbs.
150N	33 lbs.	28-38 lbs.
200N	44 lbs.	34-54 lbs.

Please contact Customer Service for assistance before placing your orders.
The pneumatic and electric height adjustable options require a higher level of product understanding, installation and product knowledge.

ADJUSTMENT OPTIONS

LG – Glides
LR – Rollers
LS – Short Stroke
NU – Numa Lift

SPECIFICATIONS

Base Height Adjustment Range	**LG:** 26 ¾" - 44 ½" (with levelers and without table top) **LS:** 18 ¼" - 28 ¼" (with levelers and without table top) **NU:** 23" - 35" (with levelers and without table top)
Column (Lower, Outer)	**LG, LS, NU:** 2.76" (70 mm) dia. x 0.079" (2mm) round steel tube
Column (Upper, Inner)	**LG, LS, NU:** 2.48" (70 mm) dia. x 0.079" (2mm) round steel tube
Disk	¼" thick steel plate
Leveler	Five (5) ⅝" - 18, five 1" dia., nickel
Mounting Plate	8" x 8" and 12" x 12": ¼" thick steel plate 12" x 12" (7 ga.) : 7 ga. thick steel plate
Assembly Method	Set of four (4) 8mm bolts both at the top and bottom of each column
Shipped	All components included for one table Not assembled

AVAILABLE OPTIONS

- Genu-Flip +$126

Caution should be taken at all times when assembling adjustable height products.
There are warning labels and tags on items that require close attention. Please follow all assembly instructions and warnings when unpacking and assembling adjustable height productions. Miss-use or improper handling of product will result in voiding of Valley Design warranty and possible injury to assembler/end-user. Valley Design does not hold responsibility for any damage to product due to miss-use, lack of attention to instructions.

Find intended use warranty information Online at www.ValleyDesign.biz/Warranty

ES

VALLEY design

PARTNER AT YOUR TABLE

Escalate Series

This base may have a small frame, but it packs a lot of stability and power. The H-Style foot allows for it to support longer top sizes and it's natural, offset pairs perfectly with open office applications.

STRONGER than it LOOKS

ESCALATE
SINGLE COLUMN FIXED

ESCALATE
DUAL COLUMN FIXED

ESCALATE
SINGLE COLUMN LIFT

ESCALATE
DUAL COLUMN LIFT

Find intended use warranty information Online at www.ValleyDesign.biz/Warranty

133 South Highway 52, Fountain, MN 55935 | ValleyDesign.biz | 507.268.4221

Escalate Series
Single Column Fixed Base

ITEM INFORMATION

Item#	Base Spread	Mount Plate	Max. Table Size	Price
70SU2236	22" x 36"	8" x 8"	24" x 42" (with screen)	$346
70SU2236	22" x 36"	8" x 8"	30" x 42" (without screen)	$346
70SU2636	26" x 36"	8" x 8"	30" x 42" (with screen)	$355
70SU2636	26" x 36"	8" x 8"	36" x 42" (without screen)	$355

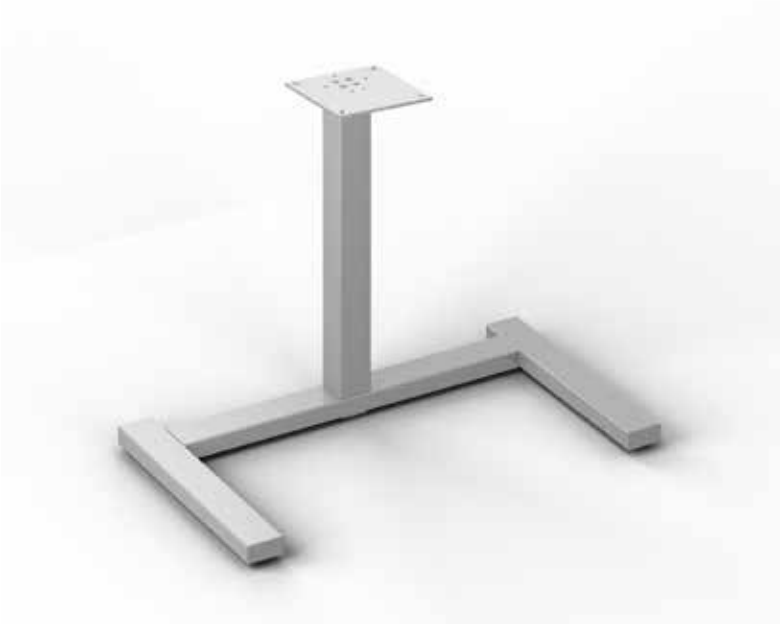

SPECIFICATIONS

Base Height	27 ¾"
Column	70 x 70 x 2 mm (2 ¾") square tubular steel
Main Bar/Feet	1 ½" x 3" u-shaped base with plastic end caps
Leveler	⅝"-18 x ½" long threaded stem with black nylon end
Mounting Plates	¼" steel mounting plate
Assembly Method	Set of four (4) 8mm bolts both at the top and bottom of each column
Shipped	Not assembled

AVAILABLE OPTIONS

- Casters +$51
- Custom Height +$47

Escalate Series
Dual Column Fixed Base

ITEM INFORMATION

Item#	Base Spread	Mount Plate	Max. Table Size	Price
70SU2242.2P	22" x 42"	8" x 12"	24" x 72" (with screen)	$454
70SU2242.2P	22" x 42"	8" x 12"	30" x 72" (without screen)	$454
70SU2642.2P	26" x 42"	8" x 12"	30" x 72" (with screen)	$463
70SU2642.2P	26" x 42"	8" x 12"	36" x 72" (without screen)	$463

SPECIFICATIONS

Base Height	27 ¾"
Columns	70 x 70 x 2 mm (2 ¾") square tubular steel
Main Bar/Feet	1 ½" x 3" u-shaped base with plastic end caps
Leveler	5/16"-18 x ½" long threaded stem with black nylon end
Mounting Plates	¼" steel mounting plate
Assembly Method	Set of four (4) 8mm bolts both at the top and bottom of each column
Shipped	Not assembled

AVAILABLE OPTIONS

- Casters +$51
- Custom Height +$94

Escalate Series
Single Column Lift

ITEM INFORMATION

Item#	Base Spread	Mount Plate	Max. Table Size	Price
LR170SU2236	22" x 36"	8" x 8"	24" x 42" (with screen)	$798
LR170SU2236	22" x 36"	8" x 8"	30" x 42" (without screen)	$798
LR170SU2636	26" x 36"	8" x 8"	30" x 42" (with screen)	$809
LR170SU2636	26" x 36"	8" x 8"	36" x 42" (without screen)	$809

AVAILABLE LIFT CAPACITY

Specify	Pound Equivalent	Lift Range
150N	33 lbs.	1-44 lbs.
200N	44 lbs.	15-55 lbs.
250N	55 lbs.	26-66 lbs.
300N	66 lbs.	37-77 lbs.

***Please contact Customer Service for assistance with color options on all adjustable height products.**

***Contact Customer Service for ordering assistance.**

SPECIFICATIONS

Base Height Adjustment Range	27.17"-44.86" (with levelers and without table top) 29.10"-46.79" (with 2" casters and without table top)
Column Outer	70 x 70 x 2 mm (2 ¾") square tubular steel
Column Inner	63 x 63 x 2 mm (2 ¾") square tubular steel
Main Bar/Feet	1 ½" x 3" u-shaped base with plastic end caps
Leveler	⅝"-18 x ½" long threaded stem with black nylon end
Mounting Plates	¼" steel mounting plate
Assembly Method	Set of four (4) 8mm bolts both at the top and bottom of each column
Shipped	Not assembled

AVAILABLE OPTIONS

- Casters (will increase height) +$51

Escalate Series
Dual Column Lift

ITEM INFORMATION

Item#	Base Spread	Mount Plate	Max. Table Size	Price
LR270SU2240	22” x 42”	8” x 12”	24” x 72" (with screen)	$1,095
LR270SU2242	22” x 42”	8” x 12”	30” x 72” (without screen)	$1,095
LR270SU2642	26” x 42”	8” x 12”	30” x 72” (with screen)	$1,105
LR270SU2642	26” x 42”	8” x 12”	36” x 72” (without screen)	$1,105

AVAILABLE LIFT CAPACITY

Specify	Pound Equivalent	Lift Range
250N	55 lbs.	26-66 lbs.
300N	66 lbs.	37-77 lbs.
350N	89 lbs.	49-89 lbs.
400N	100 lbs.	60-100 lbs.
450N	111 lbs.	71-111 lbs.
500N	122 lbs.	82-122 lbs.
550N	134 lbs.	94-134 lbs.
600N	144 lbs.	104-144 lbs.

***Please contact Customer Service for assistance with color options on all adjustable height products.**

***Contact Customer Service for ordering assistance.**

SPECIFICATIONS

Base Height Adjustment Range	27.17”-44.86” (with levelers and without table top) 29.10”-46.79” (with 2” casters and without table top)
Column Outer	70 x 70 x 2 mm (2 ¾”) square tubular steel
Column Inner	63 x 63 x 2 mm (2 ¾”) square tubular steel
Main Bar/Feet	1 ½” x 3” u-shaped base with plastic end caps
Leveler	⅝”-18 x ½” long threaded stem with black nylon end
Mounting Plates	¼” steel mounting plate
Assembly Method	Set of four (4) 8mm bolts both at the top and bottom of each column
Shipped	Not assembled

AVAILABLE OPTIONS

- Casters (will increase height) +$51

FS

VALLEY design

Focus Series

This base is fully capable of living up to its name. The Focus Series works great in single person applications and comes with a variety of available options to help the user attain full focus when using. Its ergonomic design can adjust, to help fidgety legs, fold for ease of cleaning and storage, and wheel barrow for easy movement and reconfiguration. Let the Focus Series create the perfect learning environment for all of your classroom applications!

ADJUST for the ENVIRONMENT

FIXED HEIGHT

ADJUSTABLE HEIGHT

ADJUSTABLE HEIGHT WITH FLIPPING MECHANISM

PARTNER AT YOUR TABLE

Find intended use warranty information Online at www.ValleyDesign.biz/Warranty

133 South Highway 52, Fountain, MN 55935 | ValleyDesign.biz | 507.268.4221

Focus Series

433 V Series – Single Column Round (Fixed)

ITEM INFORMATION

Item#	Base Spread	Max. Table Size	Mount Plate	Price
433R70V1830P	18" x 30"	24" x 30"	8" x 8"	$298

SPECIFICATIONS

Base Height	27 3/4"
Column	2.75" (70mm) diameter x 0.079" (2mm) round steel tube
Main Bar/Feet	2.5" wide x 1.25" thick alloy
Levelers	5/16"-18, 1.5" dia. black plastic
Mounting Plate	1/4" steel mounting plate
Shipped	Not Assembled

AVAILABLE OPTIONS

- Casters +$52
- Genu-Flip +$126

Focus Series

433 V Series – Single Column Round Adjustable

ITEM INFORMATION

Item#	Base Spread	Max. Table Size	Mount Plate	Price
433LGR70V1830P-150	18" x 30"	24" x 30"	8" x 8"	$640
433LGR70V1830P-200	18" x 30"	24" x 30"	8" x 8"	$640

AVAILABLE LIFT RATINGS

Specify	Pound Equivalent	Lift Range
150 N	33 lbs.	22-44 lbs.
200 N	44 lbs.	33-55 lbs.

SPECIFICATIONS

Base Height Adjustment Range Base Height Adjustment Range With Drop Down Kit	25.5" - 43.13" 26.16" - 43.79"
Column **(Outer)** Column **(Inner)**	2.75" (70mm) diameter x 0.079" (2mm) round steel tube 2.48" (63 mm) diameter x 0.079" (2mm) round steel tube
Main Bar/Feet	2.5" wide x 1.25" thick alloy
Levelers	5/16"-18, 1.5" dia. black plastic
Mounting Plate	1/4" steel mounting plate
Shipped	Not Assembled

AVAILABLE OPTIONS

- Casters (will increase height by 2") +$52
- Drop Down Kit (to be used only with the caster option) +$30

Standard color offerings for this product are black, silver and white. These products require a certain level of Taber Abrasion resistant paint. If you have custom colors you wish to inquire about, please contact customer service to see if your color meets this requirement prior to ordering.

Focus Series

433 V Series – Single Column Round Adjustable Flipping

ITEM INFORMATION

Item#	Base Spread	Max. Table Size	Mount Plate	Price
433LGR70V1830PGF150	18" x 30"	24" x 30"	8" x 10"	$710
433LGR70V1830PGF200	18" x 30"	24" x 30"	8" x 10"	$710

AVAILABLE LIFT RATINGS

Specify	Pound Equivalent	Lift Range
150 N	33 lbs.	22-44 lbs.
200 N	44 lbs.	33-55 lbs.

SPECIFICATIONS

Base Height Adjustment Range With Flipping Option Base Height Adjustment Range With Drop Down Kit	28.44" - 46.07" 29.10"-46.73"
Column **(Outer)** Column **(Inner)**	2.75" (70mm) diameter x 0.079" (2mm) round steel tube 2.48" (63 mm) diameter x 0.079" (2mm) round steel tube
Main Bar/Feet	2.5" wide x 1.25" thick alloy
Levelers	5/16"-18, 1.5" dia. black plastic
Mounting Plate	1/4" steel mounting plate
Shipped	Not Assembled

AVAILABLE OPTIONS

- Casters (will increase height by 2") +$52
- Drop Down Kit (to be used only with the caster option) +$30

Standard color offerings for this product are black, silver and white. These products require a certain level of Taber Abrasion resistant paint. If you have custom colors you wish to inquire about, please contact customer service to see if your color meets this requirement prior to ordering.

Focus Series

433 V Series – Square Column (Fixed)

ITEM INFORMATION

Item#	Base Spread	Max. Table Size	Mount Plate	Price
43370QV1830P	18" x 30"	24" x 30"	8" x 8"	$298

SPECIFICATIONS

Base Height	27 3/4"
Column	2.75" (70 mm) x 0.079 (2mm) square tubular steel
Main Bar/Feet	2.5" wide x 1.25" thick alloy
Levelers	5/16"-18, 1.5" dia. black plastic
Mounting Plate	1/4" steel mounting plate
Shipped	Not Assembled

AVAILABLE OPTIONS

- Casters +$52
- Genu-Flip +$126

Focus Series

433 V Series – Square Column Adjustable

ITEM INFORMATION

Item#	Base Spread	Max. Table Size	Mount Plate	Price
433LR70QV1830P150	18" x 30"	24" x 30"	8" x 8"	$670
433LR70QV1830P200	18" x 30"	24" x 30"	8" x 8"	$670

AVAILABLE LIFT RATINGS

Specify	Pound Equivalent	Lift Range
150 N	33 lbs.	22-44 lbs.
200 N	44 lbs.	33-55lbs.

SPECIFICATIONS

Base Height Adjustment Range Base Height Adjustment Range With Drop Down Kit	25.5" - 43.13" 26.16" - 43.79"
Column **(Outer)** Column **(Inner)**	2.75" (70 mm) x 0.079" (2 mm) square tubular steel 2.2" (56mm)x 0.079" (2 mm) square tubular steel
Main Bar/Feett	2.5" wide x 1.25" thick alloy
Levelers	5/16"-18, 1.5" dia. black plastic
Mounting Plate	1/4" steel mounting plate
Shipped	Not Assembled

AVAILABLE OPTIONS

- Casters (will increase height by 2") +$52
- Drop Down Kit (to be used only with the caster option) +$30

Standard color offerings for this product are black, silver and white. These products require a certain level of Taber Abrasion resistant paint. If you have custom colors you wish to inquire about, please contact customer service to see if your color meets this requirement prior to ordering.

Focus Series

433 H Series – Round Column (Fixed)

ITEM INFORMATION

Item#	Base Spread	Max. Table Size	Mount Plate	Price
433R70H1830P	18" x 30"	24" x 36"	8" x 8"	$298

SPECIFICATIONS

Base Height	27 3/4"
Column	2.75" (70mm) diameter x 0.079" (2mm) round steel tube
Main Bar/Feet	2.5" wide x 1.25" thick alloy
Levelers	5/16"-18, 1.5" dia. black plastic
Mounting Plate	1/4" steel mounting plate
Shipped	Not Assembled

AVAILABLE OPTIONS

- Casters +$52
- Genu-Flip +$126

Focus Series

433 H Series – Round Column Adjustable

ITEM INFORMATION

Item#	Base Spread	Max. Table Size	Mount Plate	Price
433LGR70H1830P-150	18" x 30"	24" x 36"	8" x 8"	$640
433LGR70H1830P-200	18" x 30"	24" x 36"	8" x 8"	$640

AVAILABLE LIFT RATINGS

Specify	Pound Equivalent	Lift Range
150 N	33 lbs.	22-44 lbs.
200 N	44 lbs.	33-55 lbs.

SPECIFICATIONS

Base Height Adjustment Range Base Height Adjustment Range With Drop Down Kit	25.5" - 43.13" 26.16" - 43.79"
Column **(Outer)** Column **(Inner)**	2.75" (70mm) diameter x 0.079" (2mm) round steel tube 2.48" (63 mm) diameter x 0.079" (2mm) round steel tube
Main Bar/Feet	2.5" wide x 1.25" thick alloy
Levelers	5/16"-18, 1.5" dia. black plastic
Mounting Plate	1/4" steel mounting plate
Shipped	Not Assembled

AVAILABLE OPTIONS

- Casters (will increase height by 2") +$52
- Drop Down Kit (to be used only with the caster option) +$30

Standard color offerings for this product are black, silver and white. These products require a certain level of Taber Abrasion resistant paint. If you have custom colors you wish to inquire about, please contact customer service to see if your color meets this requirement prior to ordering.

Focus Series

433 H Series – Round Column Adjustable Flipping

ITEM INFORMATION

Item#	Base Spread	Max. Table Size	Mount Plate	Price
433LGR70H1830PGF150	18" x 30"	24" x 36"	8" x 10"	$710
433LGR70H1830PGF200	18" x 30"	24" x 36"	8" x 10"	$710

AVAILABLE LIFT RATINGS

Specify	Pound Equivalent	Lift Range
150 N	33 lbs.	22-44 lbs.
200 N	44 lbs.	33-55 lbs.

SPECIFICATIONS

Base Height Adjustment Range With Flipping Option Base Height Adjustment Range With Drop Down Kit	28.44" - 46.07" 29.10"-46.73"
Column **(Outer)** Column **(Inner)**	2.75" (70mm) diameter x 0.079" (2mm) round steel tube 2.48" (63 mm) diameter x 0.079" (2mm) round steel tube
Main Bar/Feet	2.5" wide x 1.25" thick alloy
Levelers	5/16"-18, 1.5" dia. black plastic
Mounting Plate	1/4" steel mounting plate
Shipped	Not Assembled

AVAILABLE OPTIONS

- Casters (will increase height by 2") +$52
- Drop Down Kit (to be used only with the caster option) +$30

Standard color offerings for this product are black, silver and white. These products require a certain level of Taber Abrasion resistant paint. If you have custom colors you wish to inquire about, please contact customer service to see if your color meets this requirement prior to ordering.

Focus Series

433 H Series – Square Column (Fixed)

ITEM INFORMATION

Item#	Base Spread	Max. Table Size	Mount Plate	Price
43370QH1830P	18" x 30"	24" x 36"	8" x 8"	$298

SPECIFICATIONS

Base Height	27 3/4"
Column	2.75" (70 mm) x 0.079" (2 mm) square tubular steel
Main Bar/Feet	2.5" wide x 1.25" thick alloy
Levelers	5/16"-18, 1.5" dia. black plastic
Mounting Plate	1/4" steel mounting plate
Shipped	Not Assembled

AVAILABLE OPTIONS

- Casters +$52
- Genu-Flip +$126

Focus Series

433 H Series – Square Column Adjustable

ITEM INFORMATION

Item#	Base Spread	Max. Table Size	Mount Plate	Price
433LR70QH1830P-150	18" x 30"	24" x 36"	8" x 8"	$670
433LR70QH1830P-200	18" x 30"	24" x 36"	8" x 8"	$670

AVAILABLE LIFT RATINGS

Specify	Pound Equivalent	Lift Range
150 N	33 lbs.	22-44 lbs.
200 N	44 lbs.	33-55 lbs.

SPECIFICATIONS

Base Height Adjustment Range Base Height Adjustment Range With Drop Down Kit	25.5" - 43.13" 26.16" - 43.79"
Column **(Outer)** Column **(Inner)**	2.75" (70 mm) x 0.079 (2 mm) square tubular steel 2.2" (56 mm) x 0.079" (2 mm) square tubular steel
Main Bar/Feet	2.5" wide x 1.25" thick alloy
Levelers	5/16"-18, 1.5" dia. black plastic
Mounting Plate	1/4" steel mounting plate
Shipped	Not Assembled

AVAILABLE OPTIONS

- Casters (will increase height by 2") +$52
- Drop Down Kit (to be used only with the caster option) +$30

Standard color offerings for this product are black, silver and white. These products require a certain level of Taber Abrasion resistant paint. If you have custom colors you wish to inquire about, please contact customer service to see if your color meets this requirement prior to ordering.

Focus Series

423 H Series – Wheel Barrow Round Column (Fixed)

ITEM INFORMATION

Item#	Base Spread	Max. Table Size	Mount Plate	Price
423R70H1830P	18" x 30"	24" x 36"	8" x 8"	$346

SPECIFICATIONS

Base Height	27 3/4"
Column	2.75" (70mm) diameter x 0.079" (2mm) round steel tube
Main Bar/Feet	2.5" wide x 1.25" thick alloy
Levelers	5/16"-18, 1.5" dia. black plastic
Casters	Black plastic 1" dia. wheel, non-locking
Mounting Plate	1/4" steel mounting plate
Shipped	Not Assembled

AVAILABLE OPTIONS

- Genu-Flip +$126

Focus Series

423 H Series – Wheel Barrow Round Column Adjustable

ITEM INFORMATION

Item#	Base Spread	Max. Table Size	Mount Plate	Price
423LGR70H1830P-150	18" x 30"	24" x 36"	8" x 8"	$688
423LGR70H1830P-200	18" x 30"	24" x 36"	8" x 8"	$688

AVAILABLE LIFT RATINGS

Specify	Pound Equivalent	Lift Range
150 N	33 lbs.	22-44 lbs.
200 N	44 lbs.	33-55 lbs.

SPECIFICATIONS

Base Height Adjustment Range	26.00" - 43.64"
Column **(Outer)** Column **(Inner)**	2.75" (70mm) diameter x 0.079" (2mm) round steel tube 2.48" (63 mm) diameter x 0.079" (2mm) round steel tube
Main Bar/Feet	2.5" wide x 1.25" thick alloy
Levelers	5/16"-18, 1.5" dia. black plastic
Casters	Black plastic 1" dia. wheel, non-locking
Mounting Plate	1/4" steel mounting plate
Shipped	Not Assembled

AVAILABLE OPTIONS

Standard color offerings for this product are black, silver and white. These products require a certain level of Taber Abrasion resistant paint. If you have custom colors you wish to inquire about, please contact customer service to see if your color meets this requirement prior to ordering.

Focus Series

423 H Series –Wheel Barrow Round Column Adjustable Flip

ITEM INFORMATION

Item#	Base Spread	Max. Table Size	Mount Plate	Price
423LGR70H1830PGF150	18” x 30”	24” x 36”	8” x 10”	$758
423LGR70H1830PGF200	18” x 30”	24” x 36”	8” x 10”	$758

AVAILABLE LIFT RATINGS

Specify	Pound Equivalent	Lift Range
150 N	33 lbs.	22-44 lbs.
200 N	44 lbs.	33-55 lbs.

SPECIFICATIONS

Base Height Adjustment Range With Flipping Option	28.88” - 46.51”
Column **(Outer)** Column **(Inner)**	2.75” (70mm) diameter x 0.079” (2mm) round steel tube 2.48” (63 mm) diameter x 0.079” (2mm) round steel tube
Main Bar/Feet	2.5” wide x 1.25” thick alloy
Levelers	5/16”-18, 1.5” dia. black plastic
Casters	Black plastic 1” wheel, non-locking
Mounting Plate	1/4” steel mounting plate
Shipped	Not Assembled

AVAILABLE OPTIONS

Standard color offerings for this product are black, silver and white. These products require a certain level of Taber Abrasion resistant paint. If you have custom colors you wish to inquire about, please contact customer service to see if your color meets this requirement prior to ordering.

Focus Series

423 H Series – Wheel Barrow Square Column (Fixed)

ITEM INFORMATION

Item#	Base Spread	Max. Table Size	Mount Plate	Price
42370QH1830P	18" x 30"	24" x 36"	8" x 8"	$346

SPECIFICATIONS

Base Height	27 3/4"
Column	2.75" (70 mm) x 0.079" (2 mm) square tubular steel
Main Bar/Feet	2.5" wide x 1.25" thick alloy
Levelers	5/16"-18, 1.5" dia. black plastic
Casters	Black plastic 1" dia. wheel, non-locking
Mounting Plate	1/4" steel mounting plate
Shipped	Not Assembled

AVAILABLE OPTIONS

- Genu-Flip +$126

Focus Series

423 H Series – Wheel Barrow Square Column Adjustable

ITEM INFORMATION

Item#	Base Spread	Max. Table Size	Mount Plate	Price
423LR70QH1830P-150	18" x 30"	24" x 36"	8" x 8"	$718
423LR70QH1830P-200	18" x 30"	24" x 36"	8" x 8"	$718

AVAILABLE LIFT RATINGS

Specify	Pound Equivalent	Lift Range
150 N	33 lbs.	22-44 lbs.
200 N	44 lbs.	33-55 lbs.

SPECIFICATIONS

Base Height Adjustment Range	26.00" - 43.63"
Column **(Outer)** Column **(Inner)**	2.75" (70 mm) x 0.079" (2 mm) square tubular steel 2.2" (56 mm) x 0.079" (2 mm) square tubular steel
Main Bar/Feet	2.5" wide x 1.25" thick alloy
Levelers	5/16"-18, 1.5" dia. black plastic
Casters	Black plastic 1" dia. wheel, non-locking
Mounting Plate	1/4" steel mounting plate
Shipped	Not Assembled

AVAILABLE OPTIONS

Standard color offerings for this product are black, silver and white. These products require a certain level of Taber Abrasion resistant paint. If you have custom colors you wish to inquire about, please contact customer service to see if your color meets this requirement prior to ordering.

ER

VALLEY design

ErgoRound Series

Perfect for those interested in a more cost-effective, height adjustable product, the ErgoRound Series offers a variety of bases with soft curves and subtle angles. Sophisticated in design, these products offer a welded steel foot and a round steel column. Their rounded corners, low profile foot, and the range of available options allow for easy adaptability into any space.

REMARKABLY cost-effective and ADAPTABLE

FIXED HEIGHT END BASES

ADJUSTABLE HEIGHT END BASES

FIXED HEIGHT X-BASES

ADJUSTABLE HEIGHT X-BASES

PARTNER AT YOUR TABLE

Find intended use warranty information Online at www.ValleyDesign.biz/Warranty

133 South Highway 52, Fountain, MN 55935 | ValleyDesign.biz | 507.268.4221

ErgoRound Series
602 Fixed Height End Bases

ITEM INFORMATION

Item#	Foot Span	Recommended Max. Table Size	Mounting Plate	Price
FX2R7060222 P	22"	24" deep	12” x 15”	$286
FX2R7060222CTP	22" CT	24" deep	12” x 15”	$291
FX2R7060226P	26"	30" deep	12” x 15”	$290
FX2R7060226CTP	26" CT	30" deep	12” x 15”	$295

NOTE: Model numbers include two bases per price/set.

Shown above is item #FX2R7060222P

SPECIFICATIONS

Base Height	27¾" (with levelers and without table top)
Column	2.75” dia.r x 14 ga. round steel tube
Cantilever (CT) Option	Column will be offset 3” from center of foot
Main Bar/Foot	Laser cut and welded 7 ga. steel
Levelers	5⁄16”-18 x ½” long threaded stem with black nylon end
Mounting Plate	7 ga. formed plate welded to 14 ga. channel
Assembly Method	Set of four (4) 8mm bolts both at the top and bottom of each column
Shipped	All components included for one table with two bases Not assembled

AVAILABLE OPTIONS

- Casters +$51
- Genu-Flip Mechanism +$273
- Nesting Mechanism +$314 per set
- CT Option +$14
- Wire Access Holes +$11 per hole
- Custom Height +$48
- Wire Management Door +$96

ErgoRound Series
602 Motor Adjustable Height End Bases

ITEM INFORMATION

Item#	Foot Span	Recommended Max. Table Size	Mounting Plate	Price
MME2R7060222P	22"	24" deep	12” x 15”	$1,105
MME2R7060222CTP	22" CT	24" deep	12” x 15”	$1,111
MME2R7060226P	26"	30" deep	12” x 15”	$1,110
MME2R7060226CTP	26" CT	30" deep	12” x 15”	$1,115

NOTE: Model numbers include two bases with basic up/down switch per price. Bases offered ONLY in Silver or Black color options.

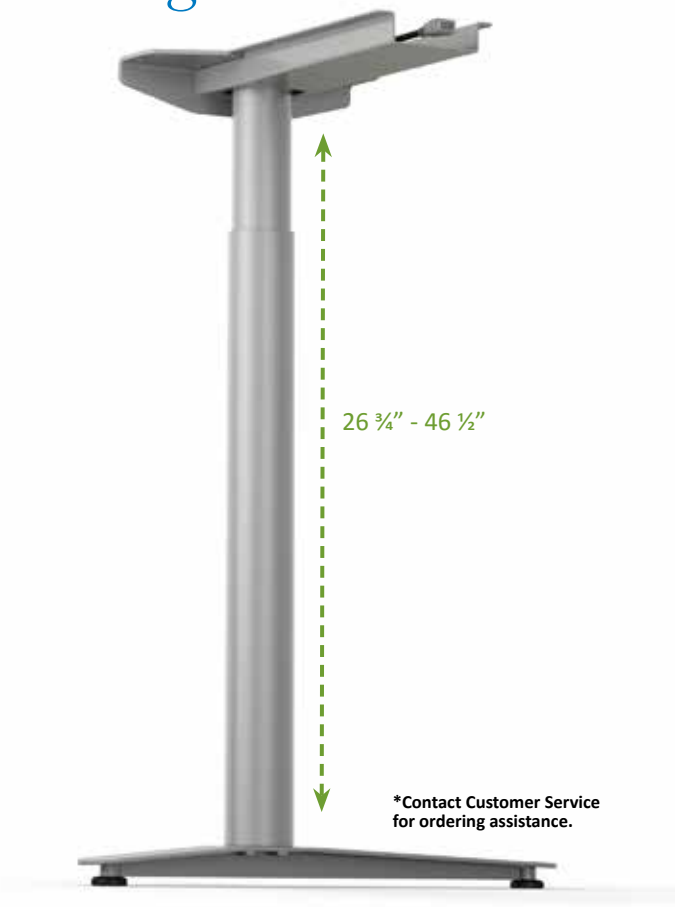

*Columns reset at middle position.

SPECIFICATIONS

Base Height Adjustment Range	26¾”-46½” (with levelers and without table top)
Column, **Lower Outer**	2.76” (70 mm) dia. x 0.079” (2 mm) round steel tube
Column, **Upper Inner**	2.48” (63 mm) dia. x 0.079” (2 mm) round steel tube
Cantilever (CT)	Column will be offset 3” from center of foot
Main Bar/Foot	Laser cut and welded 7 ga. steel
Leveler	5/16”-18 x ½” long threaded stem with black nylon end
Mounting Plate	7 ga. formed plate welded to 14 ga. channel
Assembly Method	Set of four (4) 8mm bolts both at the top and bottom of each column
Shipped	All components included for one table with two bases Not assembled

Please contact Customer Service for assistance before placing your orders.
The pneumatic and electric height adjustable options require a higher level of product understanding, installation and product knowledge.

ErgoRound Series
612 Fixed Height X-Bases

ITEM INFORMATION

Item#	Foot Span	Recommended Max. Table Size	Mounting Plate	Price
FX1R7061222P	22"	30" D, 24" x 24"	8" x 8"	$233
FX1R7061226P	26"	36" D, 30" x 30"	8" x 8"	$235
FX1R4.061230P	30"	42" D, 36" x 36"	12" x 12"	$284
FX1R4.061234P	34"	48" D, 42" x 42"	12" x 12"	$295

Shown above is item #FX1R7061226P

SPECIFICATIONS

Base Height	27¾" (with levelers and without table top)
Column (on 22" and 26")	2¾" dia. x 14 ga. round steel tube
Column (on 30" and 34")	4" dia. x 14 ga. round steel tube
Main Bar/Foot	Laser cut and welded 7 ga. steel
Leveler	5/16"-18" x ½" long threaded stem with black nylon end
Mounting Plate	For 22" and 26" : ¼" steel mounting plate For 30" and 34" : ¼" steel mounting plate
Assembly Method	Set of four (4) 8mm bolts both at the top and bottom of each column
Shipped	All components included for one table Not assembled

AVAILABLE OPTIONS

- Casters +$51
- Genu-Flip Kit +$126
- Flip Top +$94
- Wire Access Holes +$11 per hole
- Wire Management Door +$96
- Custom Height +$48

ErgoRound Series
612 Adjustable Height X-Bases

ADJUSTMENT OPTIONS

LG – Glides
450 mm (17.75") Range

LS – Short Stroke
250 mm (9.84") Range

ITEM INFORMATION

Item#	Foot Span	Recommended Max. Table Size	Mounting Plate	Price
LG1R7061222P	22"	30" D, 24" x 24"	8" x 8"	$557
LG1R7061226P	26"	36" D, 30" x 30"	8" x 8"	$560
LS1R7061222P	22"	30" D, 24" x 24"	8" x 8"	$557
LS1R7061226P	26"	36" D, 30" x 30"	8" x 8"	$560

AVAILABLE LIFT RATINGS

Specify	Pound Equivalent	Lift Range
150 N	33 lbs.	21-31 lbs.
200 N	44 lbs.	32-42 lbs.

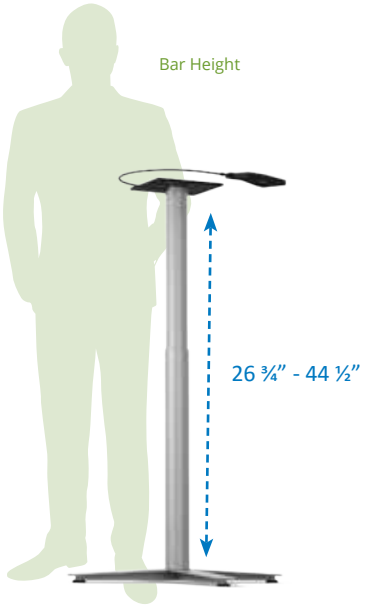

Shown above is item #LG1R7061226P

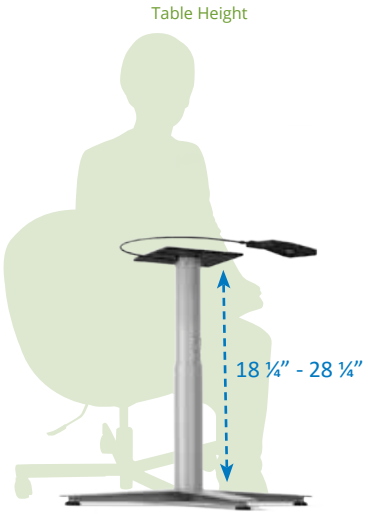

Shown above is item #LS1R7061226P

SPECIFICATIONS

Base Height Adjustment Range	**LG:** 26¾"-44½" (with levelers and without table top) **LS:** 18¼"-28¼" (with levelers and without table top)
Column, **Lower Outer**	2.76" (70 mm) dia. x 0.079" (2 mm) round steel tube
Column, **Upper Inner**	2.48" (63 mm) dia. x 0.079" (2 mm) round steel tube
Main Bar/Foot	Laser cut and welded 7 ga. steel
Leveler	5/16"-18"x ½" long threaded stem with black nylon end
Mounting Plate	¼" steel mounting plate
Assembly Method	Set of four (4) 8mm bolts both at the top and bottom of each column
Shipped	All components included for one table Not assembled

AVAILABLE OPTIONS

- Casters (will increase height by 2") +$51
- Genu-Flip +$126

Please contact Customer Service for assistance before placing your orders.
The pneumatic and electric height adjustable options require a higher level of product understanding, installation and product knowledge. **Caution should be taken at all times when assembling adjustable height products.** There are warning labels and tags on items that require close attention. Please follow all assembly instructions and warnings when unpacking and assembling adjustable height productions. Miss-use or improper handling of product will result in voiding of Valley Design warranty and possible injury to assembler/end-user. Valley Design does not hold responsibility for any damage to product due to miss-use, lack of attention to instructions.

ErgoRound Series
612 Adjustable Height X-Bases

ADJUSTMENT OPTIONS

LR – Rollers
448 mm (17.63") Range

LS – Short Stroke
250 mm (9.84") Range

ITEM INFORMATION

Item#	Foot Span	Recommended Max. Table Size	Mounting Plate	Price
LR1R4.061230P	30"	42" D, 36" x 36"	12" x 12"	$792
LR1R4.061234P	34"	48" D, 42" x 42"	12" x 12"	$804
LS1R4.061230P	30"	42"D, 36" x 36"	12" x 12"	$792
LS1R4.061234P	34"	48" D, 42" x 42"	12" x 12"	$804

AVAILABLE LIFT RATINGS

Specify	Pound Equivalent	Lift Range
200 N	44 lbs.	22-32 lbs.
250 N	55 lbs.	33-43 lbs.
300 N	66 lbs.	44-54 lbs.

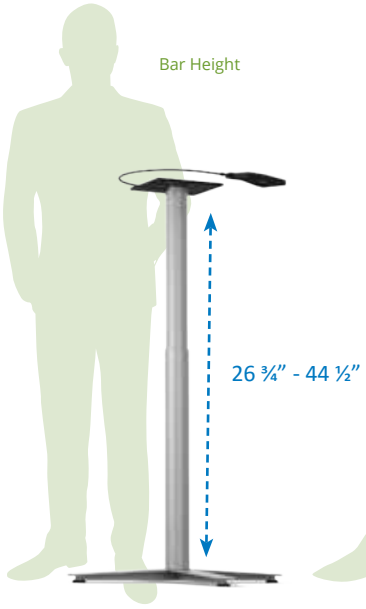

Shown above is item #LR1R4.061230P

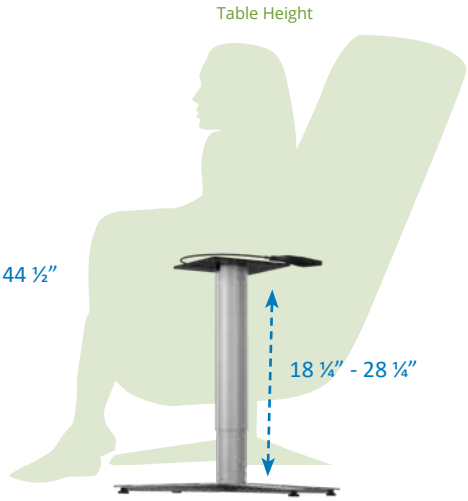

Shown above is item #LS1R4.061230P

SPECIFICATIONS

Base Height Adjustment Range	**LR:** 26¾"-44½" (with levelers and without table top) **LS:** 18¼"-28¼" (with levelers and without table top)
Column, **Lower Inner**	4" dia. x 14 ga. round steel tube
Column, **Upper Outer**	4¼" dia. x 14 ga. round steel tube
Main Bar/Foot	Laser cut and welded 7 ga. steel
Leveler	5/16"-18" x ½" long threaded stem with black nylon end
Mounting Plate	¼" steel mounting plate
Assembly Method	Set of four (4) 8mm bolts both at the top and bottom of each column
Shipped	All components included for one table Not assembled

AVAILABLE OPTIONS

- Casters (will increase height by 2") +$51

Please contact Customer Service for assistance before placing your orders.
The pneumatic and electric height adjustable options require a higher level of product understanding, installation and product knowledge. **Caution should be taken at all times when assembling adjustable height products.** There are warning labels and tags on items that require close attention. Please follow all assembly instructions and warnings when unpacking and assembling adjustable height productions. Miss-use or improper handling of product will result in voiding of Valley Design warranty and possible injury to assembler/end-user. Valley Design does not hold responsibility for any damage to product due to miss-use, lack of attention to instructions.

Find intended use warranty information Online at www.ValleyDesign.biz/Warranty

ES

PARTNER AT YOUR TABLE

VALLEY design

ErgoSquared Series

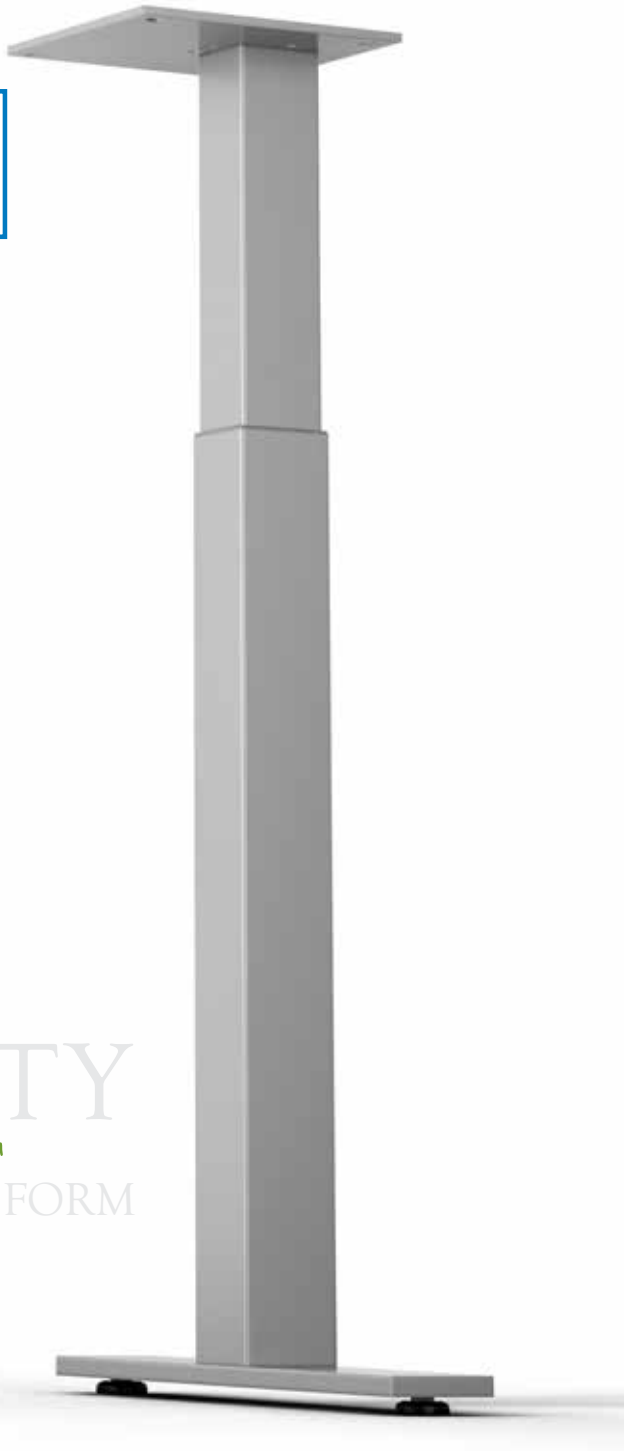

Our extensive line of adjustable height bases works hard to bring comfort at multiple levels. The pneumatic Lift goes up and down smoothly and with ease. Our Ratchet system provides for ease of adjustment - without breaking the bank or the back, and our electric height bases allow for a true sit-to-stand adjustment. No more pumping ourselves full of caffeine to make it through the day. Adjustable height tables will give you all the lift you need!

ADJUSTABILITY in its SIMPLEST FORM

ERGOSQUARED FIXED HEIGHT END BASE

ERGOSQUARED ADJUSTABLE HEIGHT END BASE

ERGOSQUARED FIXED HEIGHT X-BASE

ERGOSQUARED ADJUSTABLE HEIGHT X-BASE

Find intended use warranty information Online at www.ValleyDesign.biz/Warranty

133 South Highway 52, Fountain, MN 55935 | ValleyDesign.biz | 507.268.4221

ErgoSquared Series
Fixed Height End Base 2” x 2” Column

ITEM INFORMATION

Item #	Base Spread	Max. Table Size	Mounting Plate	Basic Foot Price	Premium Foot Price
51QE18P	18”	24” x 72”	8” x 8”	$114	$161
51QE22P	22”	30” x 72”	8” x 8”	$120	$165
51QE26P	26”	36” x 72”	8” x 8”	$124	$169

AVAILABLE FOOT DESIGNS

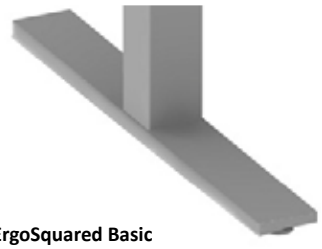

ErgoSquared Basic

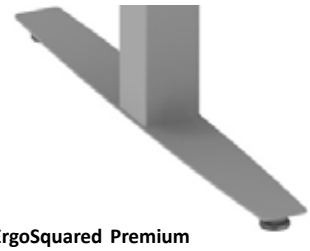

ErgoSquared Premium

SPECIFICATIONS

Base Height	27¾” (with levelers and without table top)
Column	2” x 2” square tubular steel
Cantilever (CT) Option	Column will be offset 3” from center of foot
Main Bar/Feet	**ErgoSquared Basic:** 2 ¼” x ½”, machined steel bar **ErgoSquared Premium:** 2 ¼” x ½”, machined steel bar
Leveler	5/16”-18 x ½” long threaded stem with black nylon end
Mounting Plates	¼” steel mounting plate
Assembly Method	Set of four (4) 8mm bolts both at the top and bottom of each column
Shipped	All components included for one table with two bases Not assembled

AVAILABLE OPTIONS

- Genu-Flip Mechanism +$273
- Nesting Mechanism +$314 per set
- CT Option +$14
- Casters +$26
- Custom Height +$47
- Wireway Door +$96

ErgoSquared Series
Fixed Height End Base 3" x 3" Column

ITEM INFORMATION

Item #	Base Spread	Max. Table Size	Mounting Plate	Basic Foot Price	Premium Foot Price
70QE18P	18"	24" x 72"	8" x 8"	$146	$192
70QE22P	22"	30" x 72"	8" x 8"	$151	$196
70QE26P	26"	36" x 72"	8" x 8"	$155	$200
70QE26.2P	26"	38" x 96"	8" x 8"	$242	N/A
70QE32.2P	32"	44" x 96"	8" x 8"	$260	N/A
70QE36.2P	36"	48" x 96"	8" x 8'	$269	N/A

AVAILABLE FOOT DESIGNS

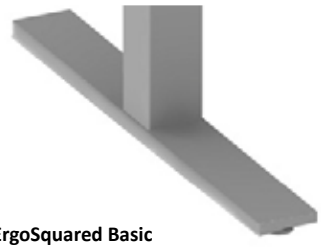

ErgoSquared Basic

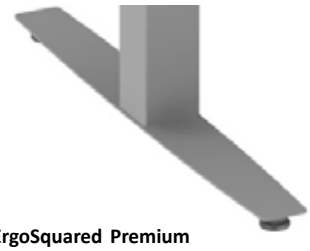

ErgoSquared Premium

SPECIFICATIONS

Base Height	27¾" (with levelers and without table top)
Column	70 x 70 x 2 mm (2 ¾") dia. square tubular steel
Cantilever (CT) Option	Column will be offset 3" from center of foot
Main Bar/Feet	**ErgoSquared Basic:** 3" x ½", machined steel bar **ErgoSquared Premium:** 3" x ½", machined steel bar
Leveler	5/16"-18 x ½" long threaded stem with black nylon end
Mounting Plates	¼" steel mounting plate
Assembly Method	Set of four (4) 8mm bolts both at the top and bottom of each column
Shipped	All components included for one table with two bases Not assembled

AVAILABLE OPTIONS

- Genu-Flip Mechanism +$273
- Nesting Mechanism +$314 per set
- CT Option +$14
- Casters +$26
- Custom Height +$48
- Wireway Door +$96

ErgoSquared Series
Ratchet End Base

ITEM INFORMATION

Item #	Base Spread	Max. Table Size	Mounting Plate	Basic Foot Price	Premium Foot Price
RA70QE18P	18”	24” x 72”	8” x 8”	$240	$285
RA70QE22P	22”	30” x 72”	8” x 8”	$244	$290
RA70QE26P	26”	36” x 72”	8” x 8”	$249	$294

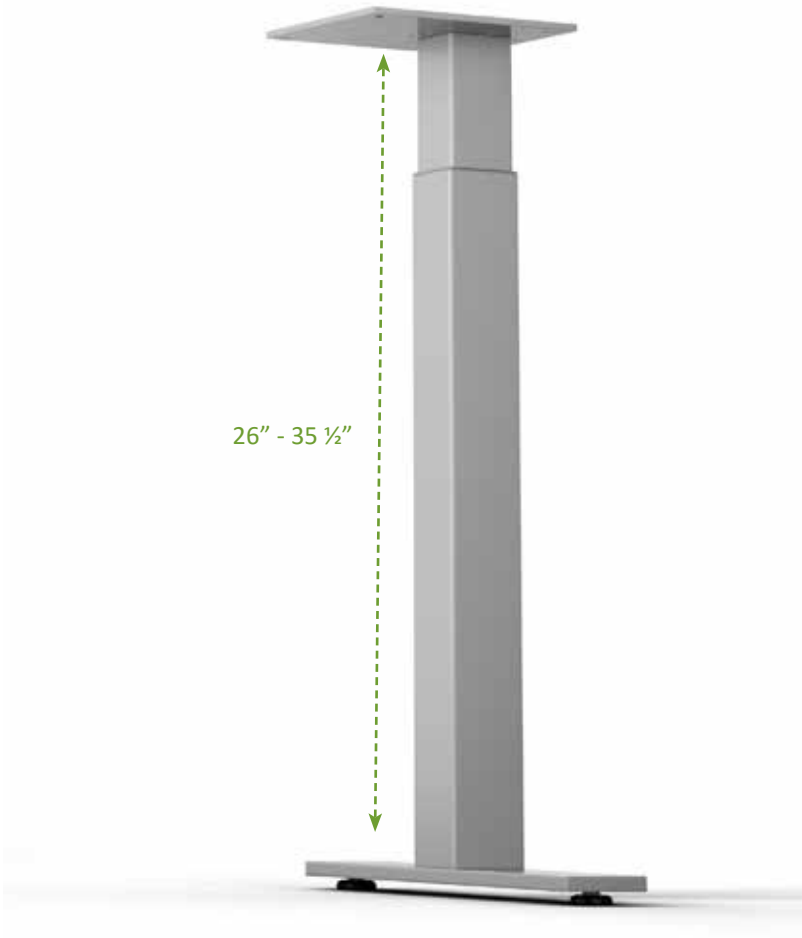

AVAILABLE FOOT DESIGNS

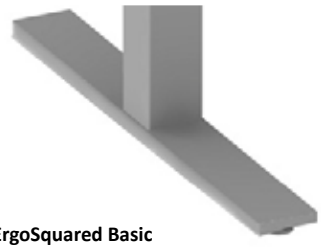
ErgoSquared Basic

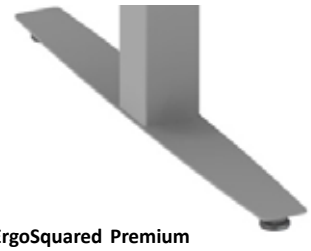
ErgoSquared Premium

***Please contact Customer Service for assistance with color options on all adjustable height products.**

SPECIFICATIONS

Base Height Adjustment Range	26”-35½” (with levelers and without table top)
Column, **Outer** Column, **Inner**	2.76” (70 mm) dia. x 0.079” (2 mm) square steel tube 2.48” (63 mm) dia. x 0.079” (2 mm) square steel tube
Cantilever (CT) Option	Column will be offset 3” from center of foot
Main Bar/Feet	**ErgoSquared Basic:** 3” x ½”, machined steel bar **ErgoSquared Premium:** 3” x ½”, machined steel bar
Leveler	5/16”-18 x ½” long threaded stem with black nylon end
Mounting Plate	¼” steel mounting plate
Assembly Method	Set of four (4) 8mm bolts both at the top and bottom of each column
Shipped	All components included for one table with two bases Not assembled

AVAILABLE OPTIONS

- Genu-Flip Mechanism +$273
- Nesting Mechanism +$314 per set
- CT Option +$14
- Casters +$26

ErgoSquared Series
Crank End Base–Extended Height Crank

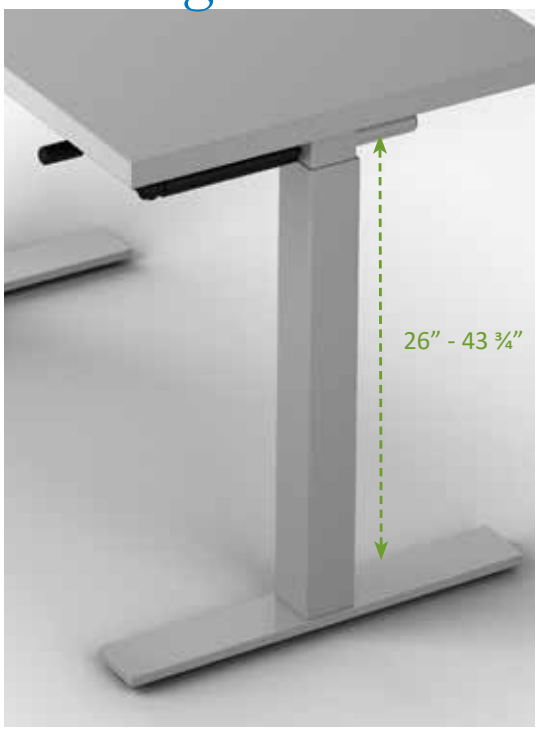

ITEM INFORMATION

Item #	Base Spread	Max. Table Size	Mounting Plate	Basic Foot Price	Premium Foot Price
CX270QE18P	18”	24” x 72”	8” x 8”	$641	$732
CX270QE22P	22”	30” x 72”	8” x 8”	$650	$740
CX270QE26P	26”	36” x 72”	8” x 8”	$659	$717

***Note: Model numbers include two bases per price.**

AVAILABLE FOOT DESIGNS

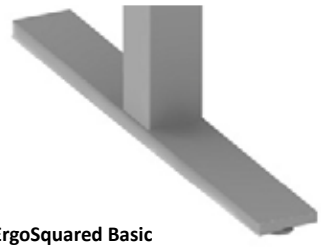

ErgoSquared Basic

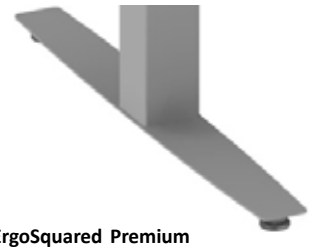

ErgoSquared Premium

***Please contact Customer Service for assistance with color options on all adjustable height products.**

SPECIFICATIONS

Base Height Adjustment Range	26”- 43¾” (with levelers and without table top)
Column, **Outer** Column, **Inner**	2.76” (70 mm) dia. x 0.079” (2 mm) square steel tube 2.48” (63 mm) dia. x 0.079” (2 mm) square steel tube
Cantilever (CT) Option	Column will be offset 3” from center of foot
Main Bar/Feet	**ErgoSquared Basic:** 3” x ½”, machined steel bar **ErgoSquared Premium:** 3” x ½”, machined steel bar
Leveler	5/16”-18 x ½” long threaded stem with black nylon end
Mounting Plate	¼” steel plate
Assembly Method	Set of four (4) 8mm bolts both at the top and bottom of each column
Shipped	All components included for one table with two bases Not assembled

AVAILABLE OPTIONS

- CT Option +$14
- Casters +$51

ErgoSquared Series
Crank End Base–Extended Crank 3 Leg System

ITEM INFORMATION

Item #	Base Spread	Max. Table Size	Mounting Plate	Basic Foot Price	Premium Foot Price
CX370QE18P	18”	24” x 72”	8” x 8”	$950	$1,024
CX370QE22P	22”	30” x 72”	8” x 8”	$963	$1,037
CX370QE26P	26”	36” x 72”	8” x 8”	$977	$1,051

***Note: Model numbers include three bases per price.**

AVAILABLE FOOT DESIGNS

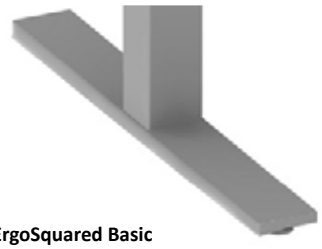

ErgoSquared Basic

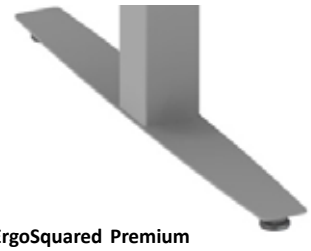

ErgoSquared Premium

***Please contact Customer Service for assistance with color options on all adjustable height products.**

SPECIFICATIONS

Base Height Adjustment Range	26”- 43¾” (with levelers and without table top)
Column, **Outer** Column, **Inner**	2.76” (70 mm) dia. x 0.079” (2 mm) square steel tube 2.48” (63 mm) dia. x 0.079” (2 mm) square steel tube
Cantilever (CT) Option	Column will be offset 3” from center of foot
Main Bar/Feet	**ErgoSquared Basic:** 3” x ½”, machined steel bar **ErgoSquared Premium:** 3” x ½”, machined steel bar
Leveler	5⁄16”-18 x ½” long threaded stem with black nylon end
Mounting Plate	¼” steel plate
Assembly Method	Set of four (4) 8mm bolts both at the top and bottom of each column
Shipped	All components included for one table with two bases Not assembled

AVAILABLE OPTIONS

- CT Option +$14
- Casters
  (will increase starting height by 2”) +$64

ErgoSquared Series
Nester Series End Base

ITEM INFORMATION

Item#	Base Spread	Recommended Max. Table Size	Price
NSCS270QE18P	18”	24” x 72”	$928
NSCS270QE22P	22”	30” x 72”	$938
NSCS270QE26P	26”	36” x 72”	$947

Nesting Dimensions
(Top view of nested tables.)

- Storage Depth
  = Mainbar length
  + (# of tables -1) x 7.25"
- Storage Width
  = Table width
  + (# of tables -1) x 2.25"
- Maximum Storage Width
  = Table width + 6.75"
  (table 5 aligns with table 1)

REMOVEABLE HANDLE FEATURE

Removable Handle
Shown in Stored Position.

Removable Handle
Shown in Use.

SPECIFICATIONS

Base Height Adjustment Range	24”- 38” (with levelers and without table top)
Column, **Upper Outer** Column, **Lower Inner**	70 x 70 x 2mm square tubular steel 63 x 63 x 2mm square tubular steel
Cantilever (CT Option)	Column wll be offset 3” from center of foot.
Main Bar/Foot	3”x 3½” machined steel bar
Leveler	⅝”-18” x ½” long threaded stem with black nylon end
Mounting Plate	¼” steel plate
Assembly Method	Set of four (4) 8mm bolts both at the top and bottom of each column
Shipped	All components included for one table Not assembled

AVAILABLE OPTIONS

- Casters +$51
- CT Option +$14

Please contact Customer Service for assistance before placing your orders.

The pneumatic and electric height adjustable options require a higher level of product understanding, installation and product knowledge. **Caution should be taken at all times when assembling adjustable height products.** There are warning labels and tags on items that require close attention. Please follow all assembly instructions and warnings when unpacking and assembling adjustable height productions. Miss-use or improper handling of product will result in voiding of Valley Design warranty and possible injury to assembler/end-user. Valley Design does not hold responsibility for any damage to product due to miss-use, lack of attention to instructions.

Find intended use warranty information Online at www.ValleyDesign.biz/Warranty

ErgoSquared Series
Motor 2 Stage End Base–2 Leg System

ITEM INFORMATION

Item #	Base Spread	Max. Table Size	Mounting Plate	Basic Foot Price	Premium Foot Price
MME270QE18P	18"	24" x 72"	8" x 8"	$1,158	$1,249
MME270QE22P	22"	30" x 72"	8" x 8"	$1,166	$1,257
MME270QE26P	26"	36" x 72"	8" x 8"	$1,176	$1,266

***Note: Model numbers include two bases per price.**

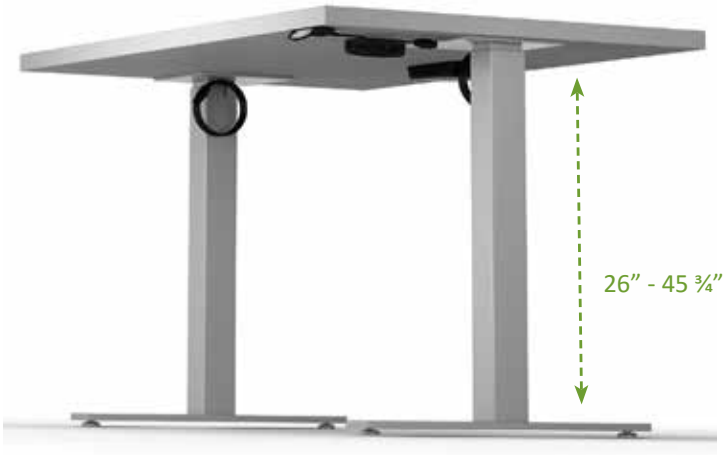

***Note: Columns reset at middle position.**

AVAILABLE FOOT DESIGNS

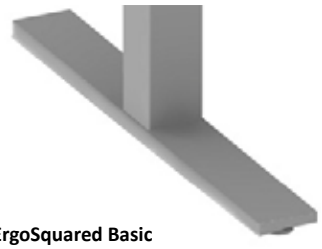

ErgoSquared Basic

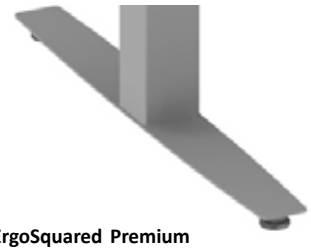

ErgoSquared Premium

***Please contact Customer Service for assistance with color options on all adjustable height products.**

SPECIFICATIONS

Base Height Adjustment Range	26"-45 ¾" (with levelers and without table top)
Column, **Outer** Column, **Inner**	2.76" (70 mm) dia. x 0.079" (2 mm) square steel tube 2.48" (63 mm) dia. x 0.079" (2 mm) square steel tube
Cantilever (CT) Option	Column will be offset 3" from center of foot
Main Bar/Feet	**ErgoSquared Basic:** 3" x ½", machined steel bar **ErgoSquared Premium:** 3" x ½", machined steel bar
Leveler	5/16"-18 x ½" long threaded stem with black nylon end
Mounting Plate	¼" steel plate
Assembly Method	Set of four (4) 8mm bolts both at the top and bottom of each column
Shipped	All components included for one table with two bases Not assembled

AVAILABLE OPTIONS

- CT Option +$14

ErgoSquared Series
Motor 2 Stage End Base–3 Leg System

ITEM INFORMATION

Item #	Base Spread	Max. Table Size	Mounting Plate	Basic Foot Price	Premium Foot Price
MME370QE18P	18”	24” x 72”	8” x 8”	$1,604	$1,695
MME370QE22P	22”	30” x 72”	8” x 8”	$1,618	$1,669
MME370QE26P	26”	36” x 72”	8” x 8”	$1,632	$1,722

***Note: Model numbers include three bases per price.**

***Note: Columns reset at middle position.**

AVAILABLE FOOT DESIGNS

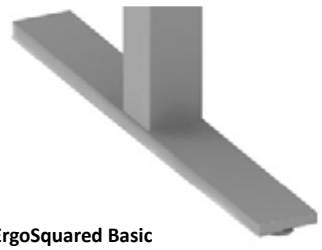

ErgoSquared Basic

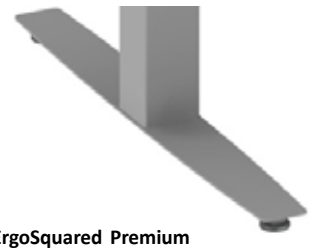

ErgoSquared Premium

***Please contact Customer Service for assistance with color options on all adjustable height products.**

SPECIFICATIONS

Base Height Adjustment Range	26”-45 ¾” (with levelers and without table top)
Column, **Outer** Column, **Inner**	2.76” (70 mm) dia. x 0.079” (2 mm) square steel tube 2.48” (63 mm) dia. x 0.079” (2 mm) square steel tube
Cantilever (CT) Option	Column will be offset 3” from center of foot
Main Bar/Feet Center Leg	**ErgoSquared Basic:** 3” x ½”, machined steel bar **ErgoSquared Premium:** 3” x ½”, machined steel bar 3” x 3” x ½” machined steel bar
Leveler	5⁄16”-18 x ½” long threaded stem with black nylon end
Mounting Plate	¼” steel plate
Assembly Method	Set of four (4) 8mm bolts both at the top and bottom of each column
Shipped	All components included for one table with three bases Not assembled

AVAILABLE OPTIONS

- CT Option +$14

ErgoSquared Series
Motor ANSI/BIFMA End Base–2 Leg System

ITEM INFORMATION

Item #	Base Spread	Max Table Size	Mounting Plate	Basic Foot Price	Premium Foot Price
MYW270QE18P	18”	24” x 72”	12” x 15”	$1,389	$1,480
MYW270QE22P	22”	30” x 72”	12” x 15”	$1,397	$1,488
MYW270QE26P	26”	36” x 72”	12” x 15”	$1,407	$1,498

***Note: Model numbers include two bases per price.**

***Note: Columns reset at mid range rather than at lowest position.**

AVAILABLE FOOT DESIGNS

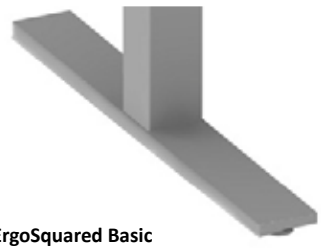

ErgoSquared Basic

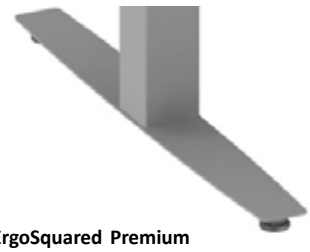

ErgoSquared Premium

***Please contact Customer Service for assistance with color options on all adjustable height products.**

SPECIFICATIONS

Base Height Adjustment Range	21”-47” (with levelers and without table top)
Column, **Outer** Column, **Middle on Stage 3** Column, **Inner on Stage 3**	2.76” (70 mm) dia. x 0.079” (2 mm) square steel tube 2.48” (63 mm) dia. x 0.079” (2 mm) square steel tube 2.20” (56 mm) dia. x 0.079” (2 mm) square steel tube
Cantilever (CT) Option	Column will be offset 3” from center of foot
Main Bar/Feet	**ErgoSquared Basic:** 3” x ½”, machined steel bar **ErgoSquared Premium:** 3” x ½”, machined steel bar
Leveler	5/16”-18 x ½” long threaded stem with black nylon end
Mounting Plate	7 ga. formed plate welded to 14 ga. channel
Assembly Method	Set of four (4) 8mm bolts both at the top and bottom of each column
Shipped	All components included for one table with two bases Not assembled

AVAILABLE OPTIONS

- CT Option +$14

ErgoSquared Series
Motor ANSI/BIFMA End Base-3 Leg System

ITEM INFORMATION

Item #	Base Spread	Max. Table Size	Mounting Plate	Basic Foot Price	Premium Foot Price
MYW370QE18P	18”	24” x 72”	12” x 15”	$2,037	$2,128
MYW370QE22P	22”	30” x 72”	12” x 15”	$2,050	$2,141
MYW370QE26P	26”	36” x 72”	12” x 15”	$2,064	$2,155

***Note: Model numbers include three bases per price.**

***Note: Columns reset at mid range rather than at lowest position.**

AVAILABLE FOOT DESIGNS

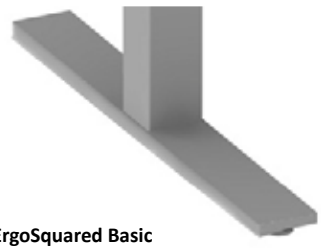

ErgoSquared Basic

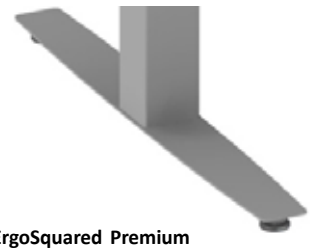

ErgoSquared Premium

***Please contact Customer Service for assistance with color options on all adjustable height products.**

SPECIFICATIONS

Base Height Adjustment Range	21”-47” (with levelers and without table top)
Column, Outer **Column, Middle on Stage 3** **Column, Inner on Stage 3**	2.76” (70 mm) dia. x 0.079” (2 mm) square steel tube 2.48” (63 mm) dia. x 0.079” (2 mm) square steel tube 2.20” (56 mm) dia. x 0.079” (2 mm) square steel tube
Cantilever (CT) Option	Column will be offset 3” from center of foot
Main Bar/Feet Center Leg	**ErgoSquared Basic:** 3” x ½”, machined steel bar **ErgoSquared Premium:** 3” x ½”, machined steel bar 3” x 3” x ½”, machined steel bar
Leveler	5/16”-18 x ½” long threaded stem with black nylon end
Mounting Plate	7 ga. formed plate welded to 14 ga. channel
Assembly Method	Set of four (4) 8mm bolts both at the top and bottom of each column
Shipped	All components included for one table with 3 bases Not assembled

AVAILABLE OPTIONS

- CT Option +$14

ErgoSquared Series
Counterbalance

Detail of the Counterbalance mechanism.

ITEM INFORMATION

Item #	Base Spread	Min. Top Size	List Price
BLB3618	18”	24” x 41”	$1,211
BLB3622	22”	30” x 41”	$1,222
BLB3626	26”	36” x 41”	$1,233
BLB4418	18”	24” x 49”	$1,220
BLB4422	22”	30” x 49”	$1,231
BLB4426	26”	36” x 49”	$1,241
BLB5218	18”	24” x 57”	$1,228
BLB5222	22”	30” x 57”	$1,239
BLB5226	26”	36” x 57”	$1,250
BLB6018	18”	24” x 65”	$1,237
BLB6022	22”	30” x 65”	$1,248
BLB6026	26”	36” x 65”	$1,258
BLB6818	18”	24” x 72”	$1,245
BLB6822	22”	30” x 72”	$1,256
BLB6826	26”	36” x 72”	$1,267

AVAILABLE LIFT CAPACITY

Specify	Lift Range
100N	30-70 lbs.
150N	42-82 lbs.
200N	53-93 lbs.
250N	64-104 lbs.
300N	75-115 lbs.
400N	98-138 lbs.
500N	120-160 lbs.
600N	143-183 lbs.

AVAILABLE FRAME WIDTHS

Code	Dimension
36	40.40”
44	48.27”
52	56.14”
60	64.02”
68	71.89”

AVAILABLE FOOT DESIGNS

ErgoSquared Basic

ErgoSquared Premium

SPECIFICATIONS

Base Height Adjustable Range	26”-45.5” (with levelers and without table top)
Column, **Outer** Column, **Inner**	2.76” (70mm) x 0.079 (2mm) square steel tubing 2.48” (56mm) x 0.079 (2mm) square steel tubing
Cantilever (CT) Option	Column will be offset 3” from center of foot
Main Bar/Feet	**ErgoSquared Basic:** 3”x ½”, steel bar **ErgoSquared Premium:** 3” x ½”, machined steel bar
Leveler	5/16”-18 x½” long threaded stem with black nylon end
Mounting Frame	Mounting frame with 16 ½” mounting brackets
Assembly Method	Set of four (4) 8mm bolts both at the top and the bottom of each column
Shipped	All components included for one table with one base. Partially assembled

AVAILABLE OPTIONS

- Black, Silver, and White ONLY
- Casters +$51
- CT Option +$14

Have an opportunity that might be supported with the Counterbalance product?
Call customer service at 507-268-4221

Find intended use warranty information Online at www.ValleyDesign.biz/Warranty

ErgoSquared Series
Fixed Height X-Base

ITEM INFORMATION

Item #	Base Spread	Max Table Size (Round)	Max Table Size (Square)	Mounting Plate	Basic Foot Price	Premium Foot Price
70QX22P	22"	30"	24" x 24"	8" x 8"	$260	$370
70QX26P	26"	36"	30" x 30"	8" x 8"	$266	$380
70QX32P	32"	42"	36" x 36"	12" x 12"	$275	$388
70QX36P	36"	48"	42" x 42"	12" x 12"	$285	$398

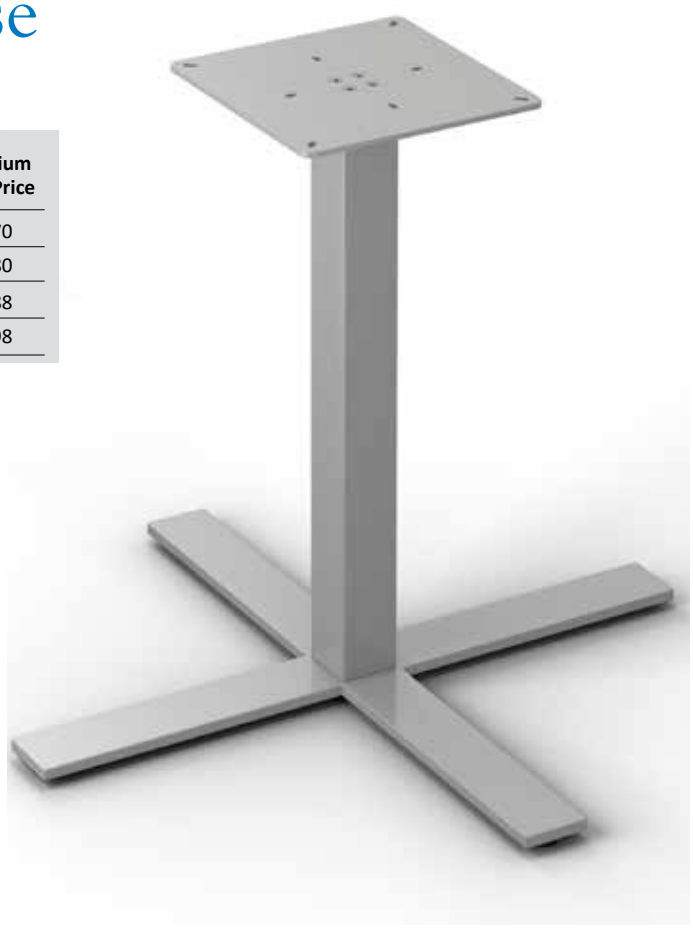

AVAILABLE FOOT DESIGNS

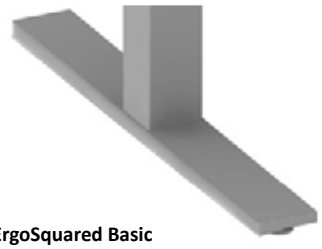

ErgoSquared Basic

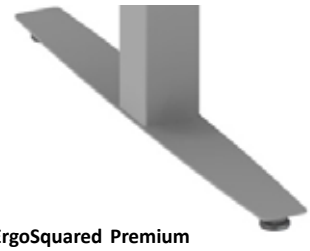

ErgoSquared Premium

SPECIFICATIONS

Base Height	27¾" (with levelers and without table top)
Column	2.76" (70 mm) dia. x 0.079" (2 mm) square tube
Main Bar/Feet	**ErgoSquared Basic:** 3" x ½", machined steel bar **ErgoSquared Premium:** 3" x ½", machined steel bar
Leveler	5/16"-18 x ½" long threaded stem with black nylon end
Mounting Plate	For 22" and 26"– ¼" plate For 32" and 36"– ¼" plate
Assembly Method	Set of four (4) 8mm bolts both at the top and bottom of each column
Shipped	All components included for one table with one base Not assembled

AVAILABLE OPTIONS

- Genu-Flip Mechanism +$126
- Casters +$51
- Custom Height +$48
- Wireway Door +$96

ErgoSquared Series
Ratchet X-Base

ITEM INFORMATION

Item #	Base Spread	Max Table Size (Round)	Max Table Size (Square)	Mounting Plate	Basic Foot Price	Premium Foot Price
RA70QX22P	22"	30"	24" x 24"	8" x 8"	$351	$464
RA70QX26P	26"	36"	30" x 30"	8" x 8"	$360	$473

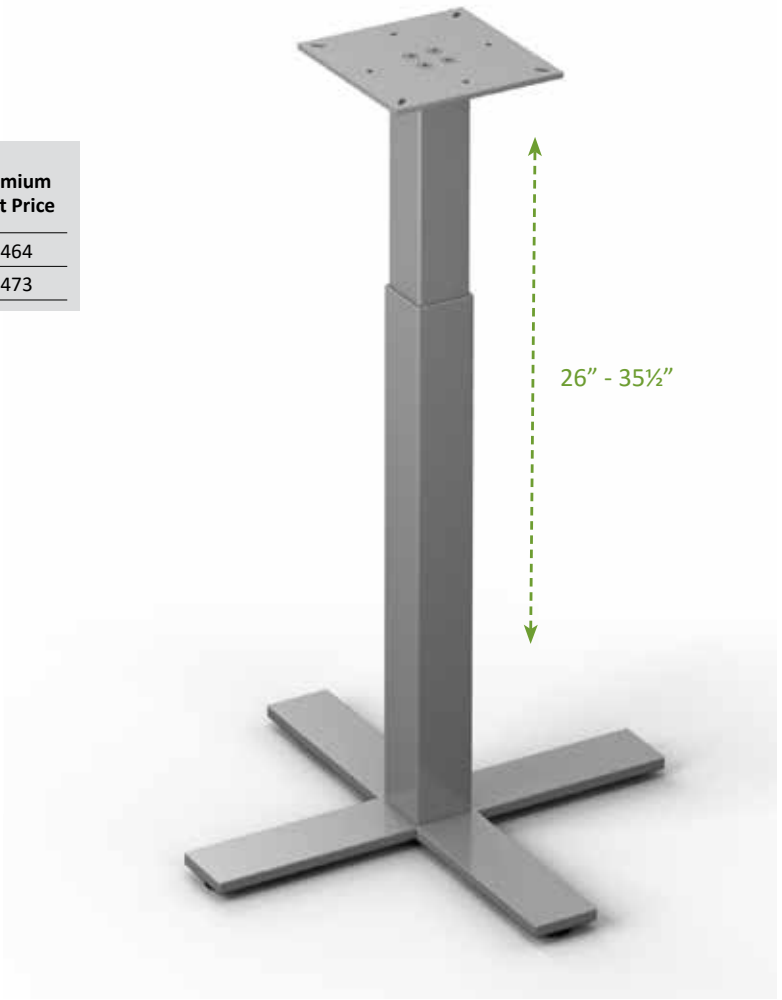

AVAILABLE FOOT DESIGNS

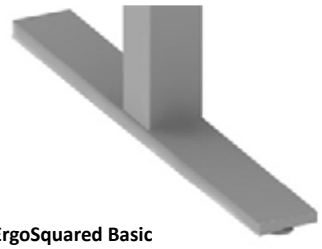

ErgoSquared Basic

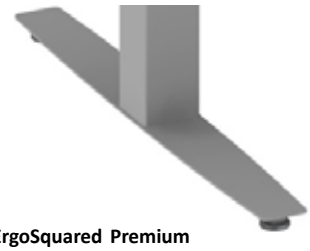

ErgoSquared Premium

SPECIFICATIONS	
Base Height Adjustable Range	26"-35½" (with levelers and without table top)
Column, **Outer** Column, **Inner**	2.76" (70 mm) dia. x 0.079" (2 mm) square steel tube 2.48" (63 mm) dia.r x 0.079" (2 mm) square steel tube
Main Bar/Feet	**ErgoSquared Basic:** 3" x ½", machined steel bar **ErgoSquared Premium:** 3" x ½", machined steel bar
Leveler	5/16"-18 x ½" long threaded stem with black nylon end
Mounting Plate	¼" plate
Assembly Method	Set of four (4) 8mm bolts both at the top and bottom of each column
Shipped	All components included for one table with one base Not assembled

AVAILABLE OPTIONS

- Genu-Flip Mechanism +$126
- Casters +$51

ErgoSquared Series
Crank X-Base

ITEM INFORMATION

Item #	Base Spread	Max Table Size (Round)	Max Table Size (Square)	Mounting Plate	Basic Foot Price	Premium Foot Price
CX70QX22P	22"	30"	24" x 24"	8" x 8"	$443	$557
CX70QX26P	26"	36"	30" x 30"	8" x 8"	$453	$566

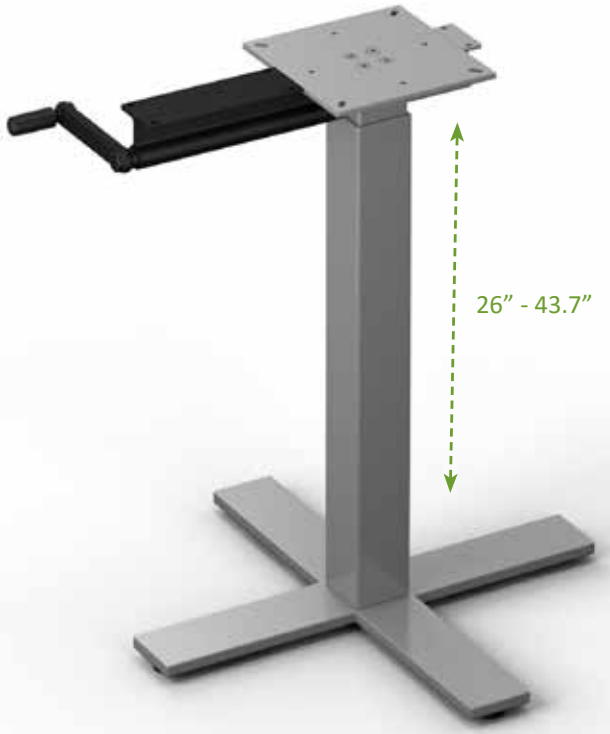

AVAILABLE FOOT DESIGNS

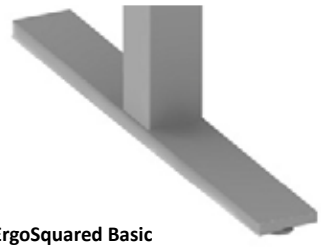

ErgoSquared Basic

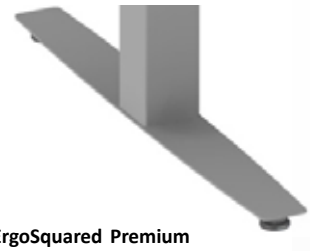

ErgoSquared Premium

SPECIFICATIONS

Base Height Adjustable Range	26"-43.7" (with levelers and without table top)
Column, **Outer** Column, **Inner**	2.76" (70 mm) dia. x 0.079" (2 mm) square steel tube 2.48" (63 mm) dia. x 0.079" (2 mm) square steel tube
Main Bar/Feet	**ErgoSquared Basic:** 3" x ½", machined steel bar **ErgoSquared Premium:** 3" x ½", machined steel bar
Leveler	5/16"-18 x ½" long threaded stem with black nylon end
Mounting Plate	¼" plate
Assembly Method	Set of four (4) 8mm bolts both at the top and bottom of each column
Shipped	All components included for one table with one base Not assembled

AVAILABLE OPTIONS

- Casters +$51

ErgoSquared Series
Pneumatic Roller X-Base

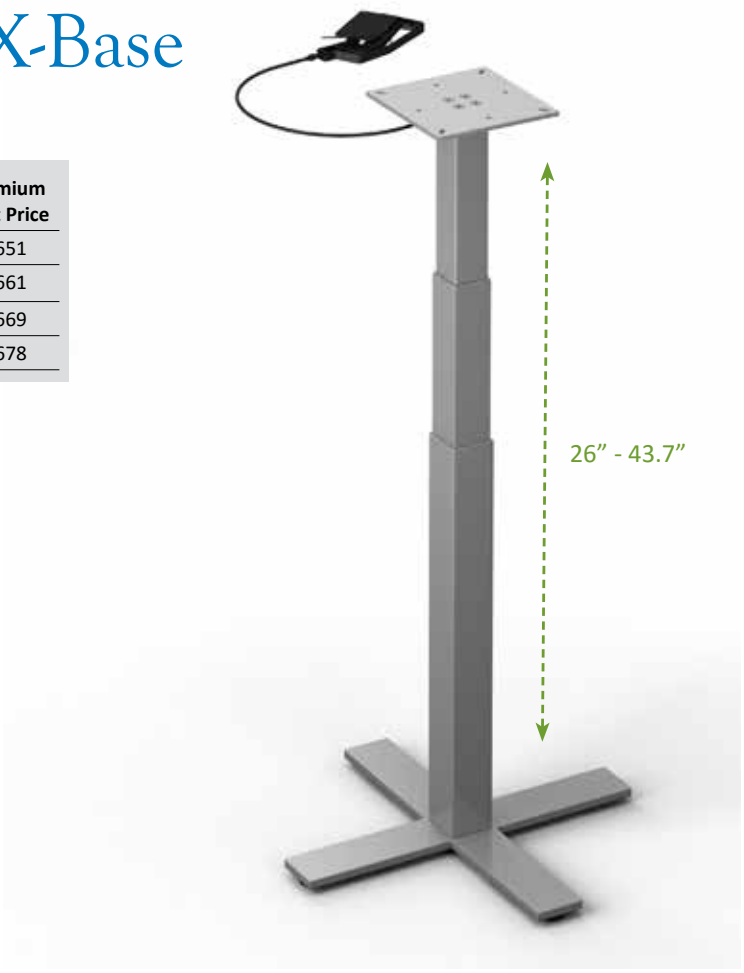

ITEM INFORMATION

Item #	Base Spread	Max Table Size (Round)	Max Table Size (Square)	Mounting Plate	Basic Foot Price	Premium Foot Price
LR70QX22P	22”	30”	24” x 24”	8” x 8”	$537	$651
LR70QX26P	26”	36”	30” x 30”	8” x 8”	$545	$661
LR70QX32P	32”	42”	36” x 36”	12” x 12”	$555	$669
LR70QX36P	36”	48”	42” x 42”	12” x 12”	$564	$678

AVAILABLE LIFT CAPACITY

Specify	Pound Equivalent	Lift Range
150N	33 lbs.	1-44 lbs.
200N	44 lbs.	15-55 lbs.
250N	55 lbs.	26-66 lbs.
300N	66 lbs.	37-77 lbs.

***Please contact Customer Service for assistance with color options on all adjustable height products.**

AVAILABLE FOOT DESIGNS

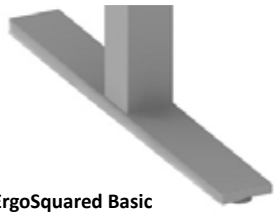
ErgoSquared Basic

ErgoSquared Premium

SPECIFICATIONS

Base Height Adjustable Range	26”-43.7” (with levelers and without table top)
Column (Outer)	2.76” (70 mm) dia. x 0.079” (2 mm) square steel tube
Column (middle on stage 3)	2.48” (63 mm) dia. x 0.079” (2 mm) square steel tube
Column (inner on stage 3)	2.20” (56 mm) dia. x 0.079” (2 mm) square steel tube
Main Bar/Feet	**ErgoSquared Basic:** 3” x ½”, machined steel bar **ErgoSquared Premium:** 3” x ½”, machined steel bar
Leveler	5⁄16”-18 x ½” long threaded stem with black nylon end
Mounting Plate	For 22” and 26”– ¼” steel plate For 32” and 36”– ¼” steel plate
Assembly Method	Set of four (4) 8mm bolts both at the top and bottom of each column
Shipped	All components included for one table with one base Not assembled

AVAILABLE OPTIONS

- Casters +$51

ErgoSquared Series
Pneumatic Roller X-Base

ITEM INFORMATION

Item #	Base Spread	Max Table Size (Round)	Max Table Size (Square)	Mounting Plate	Basic Foot Price	Premium Foot Price
LS70QX22P	22"	30"	24" x 24"	8" x 8"	$537	$657
LS70QX26P	26"	36"	30" x 30"	8" x 8"	$545	$661
LS70QX32P	32"	42"	36" x 36"	12" x 12"	$555	$669
LS70QX36P	36"	48"	42" x 42"	12" x 12"	$564	$678

AVAILABLE LIFT CAPACITY

Specify	Pound Equivalent	Lift Range
150N	33 lbs.	1-44 lbs.
200N	44 lbs.	15-55 lbs.
250N	55 lbs.	26-66 lbs.
300N	66 lbs.	37-77 lbs.

***Please contact Customer Service for assistance with color options on all adjustable height products.**

AVAILABLE FOOT DESIGNS

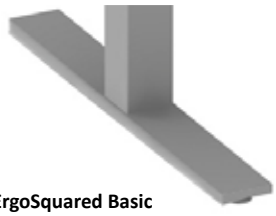
ErgoSquared Basic

ErgoSquared Premium

SPECIFICATIONS

Base Height Adjustable Range	17 ½"-27 ¼" (with levelers and without table top)
Column	**Outer:** 2.76" (70 mm) dia. x 0.079" (2 mm) square steel tube **Inner:** 2.48" (63 mm) dia. x 0.079" (2 mm) square steel tube
Main Bar/Feet	**ErgoSquared Basic:** 3" x ½", machined steel bar **ErgoSquared Premium:** 3" x ½", machined steel bar
Leveler	5/16"-18 x ½" long threaded stem with black nylon end
Mounting Plate	For 22" and 26"– ¼" steel plate For 32" and 36"– ¼" steel plate
Assembly Method	Set of four (4) 8mm bolts both at the top and bottom of each column
Shipped	All components included for one table with one base Not assembled

AVAILABLE OPTIONS

- Casters +$51

VALLEY design

Numa-Lift Option

If you need a convenient, affordable adjustable height option for your pedestal bases, the Numa-Lift is what you are looking for! With the simple flip of a lever you can adjust your tables up to 12 inches. Our pneumatic gas-assisted spring allows adjustment of the extruded aluminum inner column in 1 inch increments. It works as an available option with any of our pedestal bases that have a 3" column.

NEED a LIFT?

PARTNER AT YOUR TABLE

Find intended use warranty information Online at www.ValleyDesign.biz/Warranty

Numa-Lift Option
Single Column Lift

Shown on a Disk base. Disk base and mounting plate not included.

ITEM INFORMATION

Item #	Base Spread	Mounting Plate	Max. Table Size (Round)	Max. Table Size (Square)	Spring Size	Price
NU	18" x 18"	12" x 12"	24"	20" x 20"	40	$266
NU	22" x 22"	12" x 12"	30"	26" x 26"	40	$266
NU	26" x 26"	12" x 12"	34"	30" x 30"	60	$266
NU	30" x 30"	12" x 12"	38"	34" x 34"	60	$266
NU (Largest available size)	36" x 36"	12" x 12"	42"	36" x 36"	85	$266

NOTE: Table bases are not included in the pricing.

SPECIFICATIONS

Adjustment Range	12" adjustment in 1" increments (starting height varies based upon the base series it's ordered with)
Outer Column	3" dia., 14 ga. steel
Inner Column	Extruded aluminum
Mechanism	Gas- assisted spring allows adjustment of inner column. Inner column runs on roller bearings.
Mounting Plate	7 ga. plate steel
Shipped	Assembled only

AVAILABLE PAIRINGS

All Single Column X-Base, Disk Base with a 3" dia column. Excludes: Raptor and Arch

AVAILABLE OPTIONS

- Flip Top Mechanism +$94

MP

PARTNER AT YOUR TABLE

VALLEY design

Modesty Panel

The modesty panel hardware is designed to allow for a panel to be attached to your table or desk and provide privacy below the work surface, in addition to concealing wires, adapters or surge protectors. It is the perfect way to add a stylish appeal to your desk or workstation.

FUNCTIONALLY
OUT of SIGHT

Find intended use warranty information Online at www.ValleyDesign.biz/Warranty

133 South Highway 52, Fountain, MN 55935 | ValleyDesign.biz | 507.268.4221

Modesty Panel
End Brackets

ITEM INFORMATION

Item#	Description & Packaging	Price
51011	1 pair of brackets to attach one modesty panel	$62

SPECIFICATIONS

- 7” x 10” – 1” x 2” rectangular 14 ga. steel welded
- Two 1” x 2” black plastic caps and mounting screws
- Can be used with removable modesty panel brackets

Modesty Panel
Nester Hinge

ITEM INFORMATION

Item#	Description & Packaging	Price
5005	1 set of hinges (2 pieces)	$73

SPECIFICATIONS

- For use with Dual Leg Nester Mechanism
- Powerful magnets used to hold modesty panels 90° to work surface
- Pressure sensitive adhesive backed foam bumper pads for cushion against columns
- Hands free operation

Assembly Example

Shown with a top size of 30" x 60"

1. Work surface and hinges in locked position.

2. After the latch is released on the Nester Mechanism and the surface is tilted forward, gravity disengages the modesty panel from the work surface.

3. After rotating 90°, the latch on the Nester Mechanism engages, holding the top in a locked position. Placement of the foam bumpers protects the columns and modesty panel from accidental contact.

Modesty Panel
Removable Brackets

ITEM INFORMATION

Item#	Description & Packaging	Price
5101	1 pair (4 pieces) to attach to 1 Modesty Panel	$52

SPECIFICATIONS

- Locks into place in upright and lowered positions
- Lowering the modesty panel to a 45° angle to the base allows for detachment of modesty panel from base
- Lowering the modesty panel to a 90° angle to the base allows for easy access for wire management needs
- Available in powder coat flat black only
- Attachment screws not included when ordered separately
- Provide modesty panel size when ordering in conjunction with Valley Design bases
- Can be used with Modesty Panel End Brackets

LT

VALLEY design

PARTNER AT YOUR TABLE

Laptop Table

Whether you need a reading desk, breakfast tray or working desk, the Valley Design Laptop Table is a practical solution for people who like versatility. If you're looking for a Laptop Table that is adaptable, this is the base for you!

PRACTICAL and DURABLE

ROUND DISK BASE

SQUARE DISK BASE

Find intended use warranty information Online at www.ValleyDesign.biz/Warranty

133 South Highway 52, Fountain, MN 55935 | ValleyDesign.biz | 507.268.4221

Laptop Table

Laptop Table

ITEM INFORMATION

Item #	Base Spread	Max Top Size	Mounting Plate	Powder Coat
1191312RP	12" dia.	18" dia.	6" x 6"	$134
11913912P	9" x 12"	12" x 18"	6" x 6"	$134

SPECIFICATIONS

Base Height	25 ¼"
Column	1 ¼" x 14 ga. tubing
Base	⅜" thick steel plate
Leveler	1" x 3⁄16", soft plastic foot pads/felt pads
Mounting Plate	7 ga. steel
Assembly Method	Single bolt column to base with anti-rotation pin

PF

VALLEY design

PARSONS FRAME

Strength, stability, and easy assembly are the key features of the Parsons Frame Series. With a clean and simple design, the Parsons frame comes in a variety of heights allowing for versatility within educational, healthcare, hospitality, and corporate spaces.

Pat. Pend.

CONTEMPORARY & MODERN

STANDARD HEIGHT

COUNTER HEIGHT

BAR HEIGHT

PARTNER AT YOUR TABLE

Find intended use warranty information Online at www.ValleyDesign.biz/Warranty

133 South Highway 52, Fountain, MN 55935 | ValleyDesign.biz | 507.268.4221

Parsons Frame
Standard Height

Pat. Pend.

ITEM INFORMATION

Item #	Outside Base Dimensions	Top Size with 1" Overhang Each Side	List Price
PT2222STD	22" x 22"	24" x 24"	$493
PT2234STD	22" x 34"	24" x 36"	$504
PT2240STD	22" x 40"	24" x 42"	$510
PT2246STD	22" x 46"	24" x 48"	$519
PT2258STD	22" x 58"	24" x 60"	$523
PT2270STD	22" x 70"	24" x 72"	$539
PT2828STD	28" x 28"	30" x 30"	$502
PT2834STD	28" x 34"	30" x 36"	$508
PT2840STD	28" x 40"	30" x 42"	$514
PT2846STD	28" x 46"	30" x 48"	$518
PT2858STD	28" x 58"	30" x 60"	$529
PT2870STD	28" x 70"	30" x 72"	$546
PT3434STD	34" x 34"	36" x 36"	$514
PT3440STD	34" x 40"	36" x 42"	$522
PT3446STD	34" x 46"	36" x 48"	$524
PT3458STD	34" x 58"	36" x 60"	$538
PT3470STD	34" x 70"	36" x 72"	$553
PT4040STD	40" x 40"	42" x 42"	$527
PT4046STD	40" x 46"	42" x 48"	$530
PT4058STD	40" x 58"	42" x 60"	$534
PT4070STD	40" x 70"	42" x 72"	$544
PT4646STD	46" x 46"	48" x 48"	$534
PT4658STD	46" x 58"	48" x 60"	$547
PT4670STD	46" x 70"	48" x 72"	$561

Pictured with the caster option

SPECIFICATIONS

Base Height	27 ¾"
Vertical Pieces	2 ½" X 2 ½" Tubing
Horizontal Pieces	1 ½" X 2" Tubing
Leveler	5/16"-18, 1 ¾" dia., black plastic
Shipped	Knocked down, 1 complete frame per carton

*Pat. Pend.

AVAILABLE OPTIONS

- Powder Coat Finishes
- Locking Casters (3.5") +$120

Parsons Frame
Counter Height

ITEM INFORMATION

Item #	Outside Base Dimensions	Top Size with 1" Overhang Each Side	List Price
PT2222KTR	22" x 22"	24" x 24"	$531
PT2234KTR	22" x 34"	24" x 36"	$542
PT2240KTR	22" x 40"	24" x 42"	$548
PT2246KTR	22" x 46"	24" x 48"	$557
PT2258KTR	22" x 58"	24" x 60"	$561
PT2270KTR	22" x 70"	24" x 72"	$577
PT2828KTR	28" x 28"	30" x 30"	$540
PT2834KTR	28" x 34"	30" x 36"	$547
PT2840KTR	28" x 40"	30" x 42"	$553
PT2846KTR	28" x 46"	30" x 48"	$556
PT2858KTR	28" x 58"	30" x 60"	$567
PT2870KTR	28" x 70"	30" x 72"	$584
PT3434KTR	34" x 34"	36" x 36"	$553
PT3440KTR	34" x 40"	36" x 42"	$560
PT3446KTR	34" x 46"	36" x 48"	$563
PT3458KTR	34" x 58"	36" x 60"	$576
PT3470KTR	34" x 70"	36" x 72"	$591
PT4040KTR	40" x 40"	42" x 42"	$565
PT4046KTR	40" x 46"	42" x 48"	$569
PT4058KTR	40" x 58"	42" x 60"	$572
PT4070KTR	40" x 70"	42" x 72"	$582
PT4646KTR	46" x 46"	48" x 48"	$572
PT4658KTR	46" x 58"	48" x 60"	$586
PT4670KTR	46" x 70"	48" x 72"	$599

Pat. Pend.

SPECIFICATIONS

Base Height	34 ¾"
Vertical Pieces	2 ½" X 2 ½" Tubing
Horizontal Pieces	1 ½" X 2" Tubing
Leveler	5/16"-18, 1 ¾" dia., black plastic
Shipped	Knocked down, 1 complete frame per carton

*Pat. Pend.

AVAILABLE OPTIONS

- Powder Coat Finishes
- Locking Casters (3.5") +$120

Parsons Frame
Bar Height

ITEM INFORMATION

Item #	Outside Base Dimensions	Top Size with 1" Overhang Each Side	List Price
PT2222BAR	22" x 22"	24" x 24"	$565
PT2234BAR	22" x 34"	24" x 36"	$576
PT2240BAR	22" x 40"	24" x 42"	$582
PT2246BAR	22" x 46"	24" x 48"	$591
PT2258BAR	22" x 58"	24" x 60"	$595
PT2270BAR	22" x 70"	24" x 72"	$611
PT2828BAR	28" x 28"	30" x 30"	$574
PT2834BAR	28" x 34"	30" x 36"	$581
PT2840BAR	28" x 40"	30" x 42"	$587
PT2846BAR	28" x 46"	30" x 48"	$590
PT2858BAR	28" x 58"	30" x 60"	$601
PT2870BAR	28" x 70"	30" x 72"	$618
PT3434BAR	34" x 34"	36" x 36"	$587
PT3440BAR	34" x 40"	36" x 42"	$594
PT3446BAR	34" x 46"	36" x 48"	$597
PT3458BAR	34" x 58"	36" x 60"	$610
PT3470BAR	34" x 70"	36" x 72"	$625
PT4040BAR	40" x 40"	42" x 42"	$599
PT4046BAR	40" x 46"	42" x 48"	$603
PT4058BAR	40" x 58"	42" x 60"	$606
PT4070BAR	40" x 70"	42" x 72"	$616
PT4646BAR	46" x 46"	48" x 48"	$606
PT4658BAR	46" x 58"	48" x 60"	$620
PT4670BAR	46" x 70"	48" x 72"	$633

***Note: This base accepts a range of top sizes. Review specific applications with Customer Service.**

Pat. Pend.

Pictured with the caster option

SPECIFICATIONS

Base Height	40 ¾"
Vertical Pieces	2 ½" X 2 ½" Tubing
Horizontal Pieces	1 ½" X 2" Tubing
Leveler	5/16"-18, 1 ¾" dia., black plastic
Shipped	Knocked down, 1 complete frame per carton

***Pat. Pend.**

AVAILABLE OPTIONS

- Powder Coat Finishes
- Locking Casters (3.5") +$120

Find intended use warranty information Online at www.ValleyDesign.biz/Warranty

Parsons Frame
Installation Instructions *Pat. Pend.

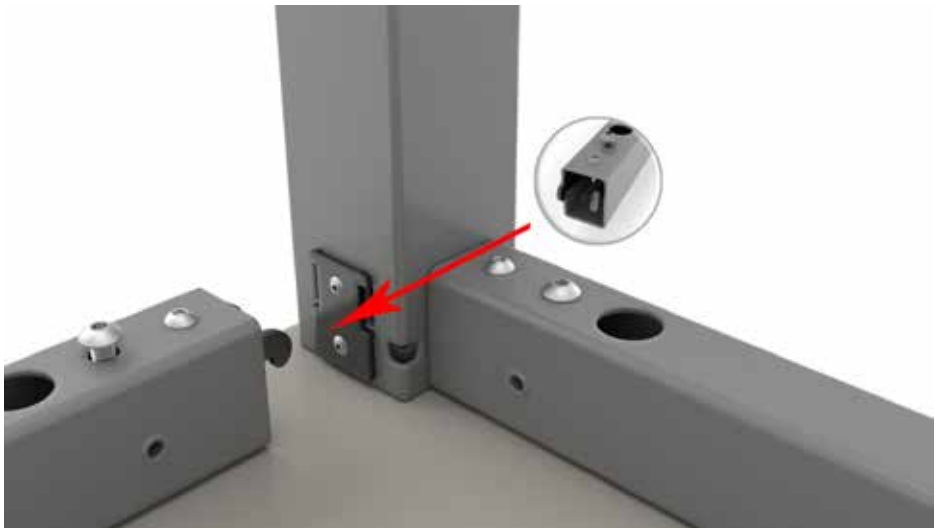

1. Align apron with leg.

2. Insert locking clip into the leg and tighten down.

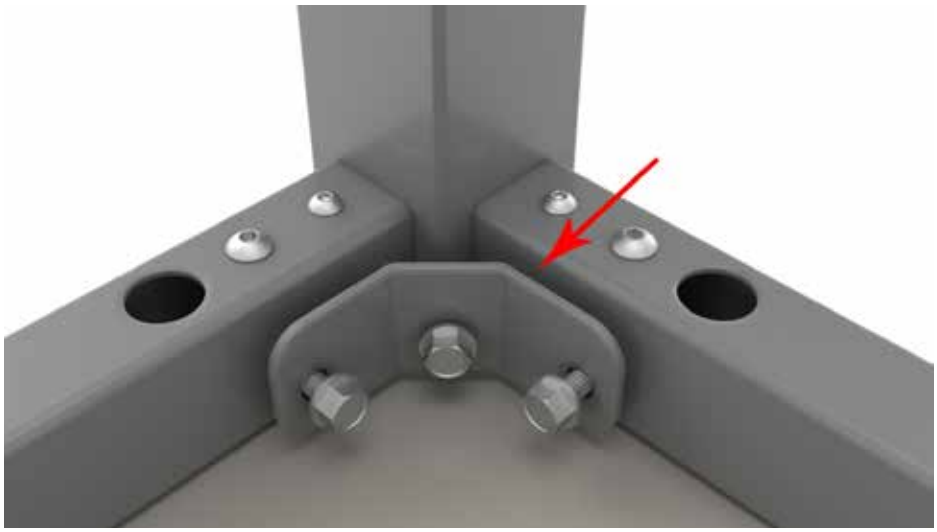

3. Align corner bracket with screw holes and secure with screws.

4. Secure aprons to tabletop using screws.

AC

VALLEY design

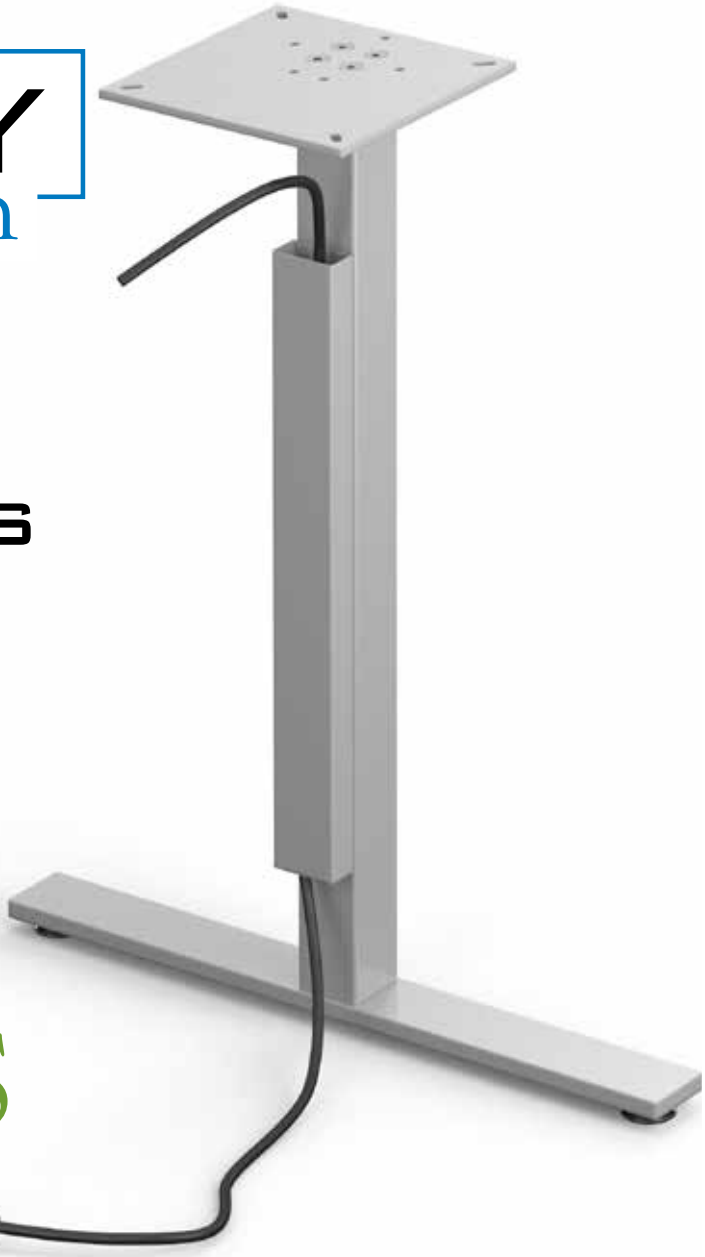

ACCESSORIES

From offset columns to support bars to locking casters, Valley Design has developed a full line of accessories to help you get the most out of your bases. These accessories are available for a variety of series to ensuring the highest amount of functionality.

GET MORE
out of your BASES

MOUNTING BRACKETS

STRETCHER BAR

FORMED SUPPORT BARS

ANTI-SAG SUPPORT BARS

WALL MOUNT CANTILEVER TABLE SUPPORT

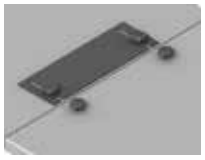

EASY LOCK TABLE GANGER

LOCKING CASTERS

BOOMERANG PLATE

FOOT RING

BAG HOOK

MAGNETIC WIRE MANAGEMENT COVER

PARTNER AT YOUR TABLE

Find intended use warranty information Online at www.ValleyDesign.biz/Warranty

133 South Highway 52, Fountain, MN 55935 | ValleyDesign.biz | 507.268.4221

ACCESSORIES
Angle Mounting Brackets

ITEM INFORMATION

Item#	Description	Price
00040	2" long angle	$7
00041	10" long angle	$9

SPECIFICATIONS

- 1½" x 1½" 16 ga. formed steel
- Multiple use
- Powder coat flat black only
- Screws not included

ACCESSORIES
Floor Mount Brackets

ITEM INFORMATION

Item #	Description	Price
-FMB	Add on to base	$7

***Note: Price is per bracket.**

Detail of floor mount bracket in use.

SPECIFICATIONS

- 0.34” dia. mounting hole size
- Color matched to the end base powder coat. Not available in chrome or premium colors.
- Available only as an add-on to our bases - not for individual sale
- Floor mounting hardware not included.
- Increases height by 1/8”
- Available on 101 and 202 bases only.

Note: A T-Base would need two (2) brackets and an X-Base would need four (4) brackets.

Accessories
Stretcher Bar

ITEM INFORMATION

Item#	Bar Length	Price
Stretcher Bar	Based on table size	$72

SPECIFICATIONS

- 1½" dia. 14 ga. tubing
- Secured with (4) ¼" – 20 button head cap screw in threaded insert
- 1 stretcher per 2 base
- Top size is required to determine length of stretcher bar
- Color matched to the end base powder coat
- **Available in tubular end base series only**

ACCESSORIES
Formed Support Bars

ITEM INFORMATION

Item#	Bar Length	Price
00009.1	55¾"	$35

SPECIFICATIONS

- 13/16" x 2¼" x 55¾" formed 14 ga. steel
- Holes spacing 6" along entire length
- Black finish only
- **Available in tubular end base series only.**

ACCESSORIES
Anti-Sag Support Bars

ITEM INFORMATION

Item #	Bar Length	Tube Only	Tube with End Caps and Screws
00009	3'	$52	$65
00005	4'	$52	$65
00006	5'	$52	$65
00003	6'	$52	$65
00007	7'	$67	$81
00002	8'	$67	$81
00001	10'	$88	$100
00004	12'	$101	$114

SPECIFICATIONS

- 1" x 2" 14 ga. rectangular steel tubing
- 2 holes per 12" spacing
- Black finish only

ACCESSORIES
Wall Mount Cantilever Table Support

ITEM INFORMATION

Item #	Table Bar Length	Wall Mount Bar Length	Max. Top Size	Price
10050P	21"	15¼"	36" x 30"	$113
10051P	29"	15¼"	48" x 36"	$116
10052P	47"	15¼"	60" x 36"	$125
10053P	21"	25"	36" x 30"	$121
10054P	29"	25"	48" x 36"	$126
10055P	47"	25"	60" x 36"	$136

SPECIFICATIONS

- 2” Square 16 ga. steel tubing
- Welded ¼” mounting straps
- Welded ⅛” angle iron reinforcement
- 45° angle cut on 15¼” lengths, One 2” plastic caps provided
- Straight cut on bottom of 25” lengths, Two 2” plastic caps provided
- 45° support welded between wall mount and support bar
- Screws not included

ACCESSORIES
Easy Lock Table Ganger

ITEM INFORMATION

Item #	Description	Price
00310	Table Ganger with 4 clamping knobs	$15
00311	Table Ganger with 4 clamping knobs, 4 table inserts and 1 insert tool	$18

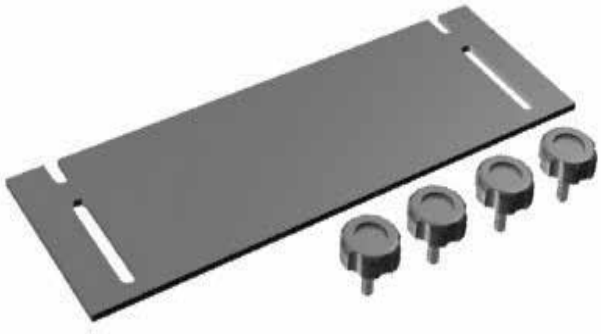

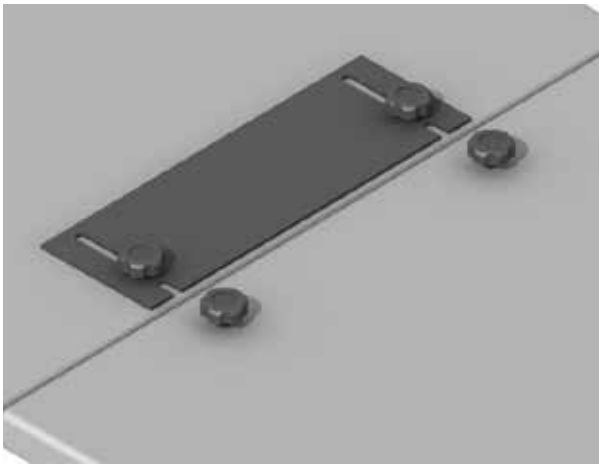

SPECIFICATIONS

- 4” x 12” 11 ga. steel
- 4 knobs per unit
- Self storing
- Only 1 unit required for tables up to 42” wide
- Available in powder coat flat black only

Accessories
Locking Casters

ITEM INFORMATION

Item#	Designator	Price
2" Locking Caster (Black)	-LC	$13 each

ITEM INFORMATION

Item#	Designator	Price
2" Soft Wheel Locking Caster (Black)	-LCS	$17 each

ITEM INFORMATION

Item#	Designator	Price
2" Premium Locking Caster (Silver/Black)	-SC	$17 each

ITEM INFORMATION

Item#	Designator	Price
3" Locking Caster (Black)	-LC3	$17each

ACCESSORIES
Boomerang Plate

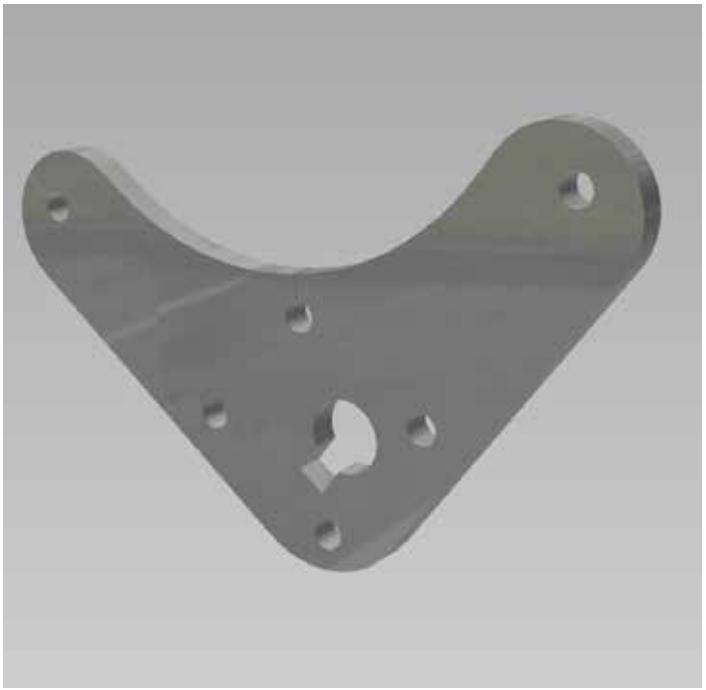

ITEM INFORMATION

Item#	Designator	Price
BM10002P	-BM	$9 each

SPECIFICATIONS

- Available on 2” Classic Column Leg

How to Install:

Simple threaded keyhole attachment allows legs to be easily removed for storage and quickly reassembled for use.

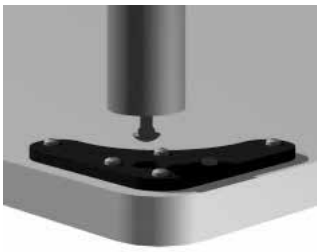

1. Thread bolt part way into leg.

2. Insert head of bolt into keyhole

3. Slide leg to the right about½".

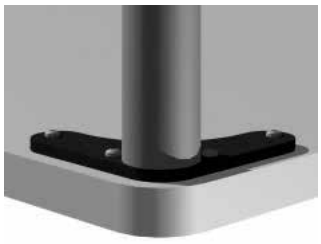

4. Turn leg until tight on bracket.

Reverse sequence to disassemble for storage with mounting bracket remaining on table top.

ACCESSORIES
Foot Ring

ITEM INFORMATION

Item#	Designator	Price
Foot Ring	-FR	$120 each

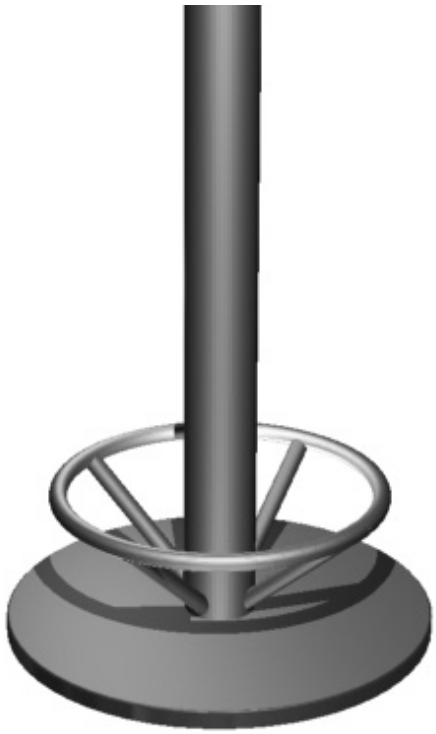

FR1173024P

SPECIFICATIONS

- Ring is 12” from the floor
- 20” disk gets a 14” disk foot ring
- 24” and 32” disks get a 19” disk foot ring.
- **Not Available with Adjustable Height**

Accessories
Bag Hook

ITEM INFORMATION

Item#	Description & Packaging	Price
H00939-25	2” bag hook with bent mounting tab	$139 (pack of 25)
H00939-500	2” bag hook with bent mounting tab	$2,568 (pack of 500)

SPECIFICATIONS

- 2” x 2.36” 14 ga. bent steel
- Powder coat, flat black only
- Screws included
- Comes packed in sets of 25
- Tested to hold up to 100 lbs.

Available Finishes
Powder Coat Finishes

REDS

Traffic Red
P10709
80% Gloss

Signal Red
P10711
80% Gloss

Ruby Red
P10710
80% Gloss

GREENS

Lime Green
P10708
80% Gloss

Grass Green
P10707
80% Gloss

Moss Green
P10706
80% Gloss

BLUES

Sky Blue
P10713
80% Gloss

Signal Blue
P10378
80% Gloss

Navy Blue
P10712
80% Gloss

SILVERS/GRAYS

Silver
P10608
75% Gloss

Platinum
Metallic
P10549
60% Gloss

Anodized
Silver
P10724
15-25% Gloss

Platinum
Texture
P10722
8-12% Gloss

Cool Gray
P10659
25-35% Gloss

Silver Texture
P10723
8-12% Gloss

WHITES

Ergo White
P10602
85% Gloss

Furniture
White
P10023
40% Gloss

Arc White
Wrinkle
P10558
20% Gloss

NEUTRALS/EARTHTONES

Champagne
Metallic
P10439
34-45% Gloss

Flint
P10415
35-45% Gloss

Night Bronze
P10725
3-7% Gloss

Neutral Light
P10114
40% Gloss

Sand
P10590
25-30% Gloss

Satin Nickel
P10542
50-60% Gloss

PREMIUM FINISHES

Chrome
Premium
Finish

Brushed
Chrome
Premium
Finish

Brushed Steel
Premium
Finish

BRONZES

Gunmetal
Metallic
P10142
40% Gloss

Raw Steel
P10720
15-25% Gloss

Mist Gray
Wrinkle
P10117
3% Gloss

Auburn Gray
P10131
85% Gloss

Bronze Matte
Metallic
P10566
15-25% Gloss

BLACKS

Ergo Black
P10588
30% Gloss

Flat Black
P10031
3% Gloss

Carbon
Metallic
P10613
35% Gloss

Black Wrinkle
P10030
3% Gloss

Coal Black
P10008
60% Gloss

DON'T SEE WHAT YOU NEED?
Contact our customer service team for custom paint options.

We take pride in the quality and variety of our finishes. All products are hand-ground and polished prior to finishing. The product is then finished to our customer's specifications and our rigid standards of quality. This ensures the best looking and longest lasting finish available in the industry.

Our flaw-free, seamless coating is extremely durable, providing superb impact and corrosion resistance.

See next page for approved colors for adjustable height.

Note: Actual colors may vary slightly from this representation (due to printer/monitor calibration).

Available Finishes
Approved Colors for Adjustable Height

REDS

Traffic Red
P10709
80% Gloss

Signal Red
P10711
80% Gloss

Ruby Red
P10710
80% Gloss

GREENS

Lime Green
P10708
80% Gloss

Grass Green
P10707
80% Gloss

Moss Green
P10706
80% Gloss

BLUES

Sky Blue
P10713
80% Gloss

Signal Blue
P10378
80% Gloss

Navy Blue
P10712
80% Gloss

SILVERS/GRAYS

Silver**
P10608
75% Gloss

Platinum
Metallic
P10549
60% Gloss

Anodized
Silver
P10724
15-25% Gloss

WHITES

Ergo White**
P10602
85% Gloss

NEUTRALS/EARTHTONES

Champagne
Metallic
P10439
34-45% Gloss

Flint
P10415
35-45% Gloss

Night Bronze
P10725
3-7% Gloss

BRONZES

Gunmetal
Metallic
P10142
40% Gloss

Raw Steel
P10720
15-25% Gloss

BLACKS

Ergo Black**
P10588
30% Gloss

Flat Black
P10031
3% Gloss

Carbon
Metallic
P10613
35% Gloss

Black Wrinkle
P10030
3% Gloss

Coal Black
P10008
60% Gloss

****NOTE:**

Our Counterbalance products are only available in Ergo White, Ergo Black, or Silver.

Our ErgoRound electric products are only available in Ergo Black or Silver.

TERMS & CONDITIONS

Pricing

All prices quoted are list prices, FOB our factory. Contact your customer service representative for discount pricing. All prices quoted include packaging, not shipping. All documentation and literature is based upon current information available at the time of publication of this booklet. We reserve the right to make price changes, product improvements, design enhancements and finish availability changes at any time without prior notice. **Please note that OEM Pricing is available for Manufacturer to Manufacturer only.**

Order acknowledgments

Orders will be acknowledged in writing within five (5) working days of receipt of purchase order. No orders shall be deemed binding upon Valley Design until confirmation by acknowledgment which represents our interpretation of your order, as well as current product pricing and scheduled ship date.

Discrepancies, misunderstandings or disagreements must be reported to your customer service representative within five (5) working days of your receipt of your order acknowledgments. Failure to do so may cause your to incur order change charges. See cancellation & order changes.

Cancellation and Order Changes

Cancellations and order changes made after five (5) working days of receipt of the order acknowledgment must have written authorization from our factory. Restocking of standard bases ready for shipment will be 30% of order or $25 whichever is greater. All special orders will be prorated by the amount of manufacturing time involved from the date of acknowledgment to the date of cancellation or change.

Terms

Customers with an open account have standard payment terms of thirty (30) days net after date of invoice. An open account must be established with our accounts receivable department prior to shipment. Possession of this price list does not constitute an open account agreement. To establish an open account, contact our customer service department for the appropriate forms. Our credit application must be completed in full, signed by an officer of the company and returned to our credit department for processing. Please allow two weeks for processing. If an open account is not established, other payment options include prepay before shipment, prepay before production and credit card. We reserve the right to charge a 3% fee.

Routing

All products will be shipped FOB our dock. Legal responsibility for the product transfers to the buyer upon acceptance by the carrier. Inspect all merchandise immediately upon receipt. All damage claims must be filed with the freight carrier. We will make every attempt to comply with requests for specific carriers. The freight charges may be collect to the receiver, billed to the purchaser or prepaid by Valley Design and added to your invoice. If we prepay freight, a 10% surcharge of the freight charges will be added to your invoice.

Recommended Top Sizes

The recommended top sizes are based on testing with unfinished MDF tops. We recommend that our customers test the bases with the actual top material and construction that will be used on the table.

The recommendations for maximum square table size is based on testing done with the X-base oriented at 45° to the top (corner-to-corner orientation). Orienting the X-base at 0° to the top (perpendicular to the sides) may affect the strength of the base and has not been tested.

Returns

Approval requests on returns must be made through our Customer Service department. In the event that your return request is approved, the Customer Service Manager will provide authorization documentation for the return. Product returns will not be accepted without an authorization number from the factory. All returned products are subject to a 30% restocking charge. Freight on original shipment is nonrefundable. Any returned product must be shipped freight prepaid in the original container and condition in which it was received.

Damage to the returned product as well as any damage claims are the responsibility of the original purchaser. Valley Design reserves the right to refuse any returned product and will not accept the return of the custom or special order product. No collect shipments will be accepted and all returns are at your own risk and expense. Returns which are unauthorized or are not accompanied by the required documentation and bills of lading will be refused.

Shipment Damage Claims

Legal title to merchandise passes to the buyer upon acceptance by the carrier. All cartons must be carefully inspected upon delivery for visible and concealed damage. If concealed damage has occurred, the carrier must be notified within five (5) days. All of our product is thoroughly inspected before it leaves the factory; therefore, it is the buyer's responsibility to seek recourse against the carrier.

Quality Plan

Valley Design's standard quality plan applies to all product in this catalog unless otherwise specified by the customer. For more information on Valley Design's quality plan, contact our customer service department.

Limited Warranty

All products manufactured by Valley Design are guaranteed to be free of defects due to workmanship for a period of five (5) years from date of purchase. All adjustable height products have a warranty of two (2) years on moveable parts. We will repair or replace, at our option, any product that we determine to be defective as a result of faulty material or workmanship. Valley Design is not liable for damage incurred to its products during the installation process. Improper use of power tools with higher levels of torque, drill speed and power will result in damage not covered under the warranty.

In no event shall our liability under this warranty exceed the original purchase price of the product determined to be defective. Additional fees as a result of loss of use, consequential damage or injury are outside the scope of our liability and will not be covered without prior written consent from Valley Design. This warranty does not apply where product has been abused, mishandled or subjected to use other than for which it was designed. For purposes of this warranty, normal wear to the product finish shall not be considered a defect. There are no other warranties expressed or implied. For further information on warranty information, visit www.ValleyDesign.biz/Warranty

PARTNER AT YOUR TABLE

CONTACT INFORMATION

SALES TEAM

Greg Luegers
Vice President of Sales
812.582.9177 | **gluegers@valleydesign.biz**

Luke Isensee
Business Development Manager
507.268.4221 - ext. 1161 |lisensee@valleydesign.biz

Pat Anderson
Sales Analyst
507.268.4221 - ext. 1141 |panderson@valleydesign.biz

CUSTOMER SERVICE STAFF

Rachel Glende
Customer Service Representative
507.268.4221 - ext. 1120 | **rglende@valleydesign.biz**

Mona Himli
Customer Service Representative
507.268.4221 - ext. 1149 | **mhimli@valleydesign.biz**

OFFICE HOURS

Monday–Friday
7:00 A.M. – 4:30 P.M. CST
Saturday & Sunday
Closed
(Offices are closed Memorial Day, Independence Day, Labor Day, Thanksgiving and Friday after, Christmas Eve, Christmas Day, and New Year's Day).

PARTNER AT YOUR TABLE